ig Series HMI Installation Manual

Part 1 General Note

- The communication interfaces of this series of HMI all support RS232, RS485, RS422 com munication, which are composite communication ports. When downloading the project, please use the USB download cable, U disk or Ethernet interface to download.
- The power ground must be connected to make the HMI run correctly.
- The communication ground must be connected to make the HMI communicate correctly.

Part 2 Safety Precautions

Notice following safety precautions at any moment when installing, wiring, operating, vindicating and examining.

Installation

- Please setup the HMI according to this manual otherwise it may cause device damage.
- It's Forbid to uncover the product in the environment that has water vapor, corrosive gas or combustible gas, otherwise it may cause short circuit or fire.

Wiring

- Please connect the grounding terminal with class-3ground, otherwise it may cause short circuit or fire.
- This series HMI use 24-volt power supply. Any connection of non-standard power supply will lead to machine damage.

Operation

- This series HMI need PIStudio software to design project picture. HMI not designed may lead to run abnormally.
- Do not change wiring while the power is ON, otherwise it may cause short circuit or device damage.
- Please do not touch panel with sharp objects, otherwise it may lead to panel depressed, thereby make HMI run abnormality.
- The human-machine interface is a specialized device that must be installed, operated, an dmaintained by trained and skilled technicians. It is strictly prohibited for use by children.

Maintenance

- It's forbidden to touch inside HMI, or else it may lead to short circuit or device damage.
- When power, it’s forbidden to dismantle HMI panel, otherwise it may lead to short circuit or device damage .
- Do not touch connection terminal in 10 minutes of turning off power, otherwise residual voltage may lead to short circuit or device damage.
- When operating, exhaust vent should not be sealed LED, otherwise it may lead to failure easily.

Communication

- Please connect to the communication wire according to this manual.
- The length of communication wire should meet the requirement.
- Use the correct ground loops in order to avoid abnormal communication.

Part 3 Work Environment

The product must be placed in the pack box before installation, if not used for a while, in order to make the product accord with the warranty of our company and future maintenance, be sure to notice the following items when stored.

- Storage environment must be dry and dust-free.
- Storage ambient temperature must refer to "Specifications".
- Storage humidity must refer to "Specifications".
- Avoid corrosive gases and liquids in the storage environment.
- Avoid placing the product directly on the ground.

Part 4 Basic Inspection

Please do following basic checking before using this series HMI.

General

- Check if each screw is loose.
- The vent hole should be protected from oil, water and metal powder, and the chip powder of the drill should be prevented from falling into the HMI.
- If there are harmful gases or dust in the HMI operating environment, please take protective measures.

Checking before installation (Unpowered)

- Please deal with connection division of wiring terminal insulated.
- Communication wiring should be correct, otherwise abnormal operation may occur.
- Check for foreign matter entering the interior of the HMI, especially for flammable substances and conductive materials such as screws, metal sheets, etc.
- Please regulate instrument to reduce electromagnetism interference.
- Check HMI supply voltage.

Checking before running (powered)

- Check the status of the power indicator.
- Check if the communication between the HMI and the device is normal.
- If there is any abnormality in the HMI interface, please contact the manufacturer.

Part 5 Packing List

Sequence number	Component	Quantity
1	this series HMI	1
2	HMI fixed buckle	4
3	Power terminal	1

Part 6 Specifications

Content \ Module	PI3041ig(N) / PI3043ig / PI8043ig / PI3070ig / PI3070ig-SL / PI8070ig/ PI8070ig(N)	PI3102ig/ PI8102ig / PI3101ig(N) / PI8101ig(N)/ PI3101ig-WK	PI8121ig(N)	PI8151ig(N)/ PI9102ig	PI8150ig / PI8150ig(N)	PI9150ig(N)
Power voltage	DC24V					
Power voltage range	DC12V-DC28V		DC18V~DC28V			
Permissible instantaneous power failure time	<5ms					
Power consumption	<8W	<10W	<18W	<15W		<18W
Operating ambient temperature	-10°C~+55°C				0°C~+50°C	
Storage ambient temperature	-20°C~+70°C				-20°C~+60°C	
Operating ambient humidity	10%~90%RH (Non-condensing)					
Storage ambient humidity	10%~90%RH (Non-condensing)					
Vibration resistance	Conforms to IEC61131-2 standard: Continuous vibration:10Hz~57Hz 0.075mm,57Hz~150Hz 9.8m/s^2 Intermittent vibration:10Hz~57Hz 0.035mm,57Hz~150Hz 4.9 m/s^2 in each X, Y, Z direction 10 times (80 minutes)					
Corrosion resistance	Avoid corrosive gas					
Cooling method	Natural air cooling					

Part7 Parts and Function

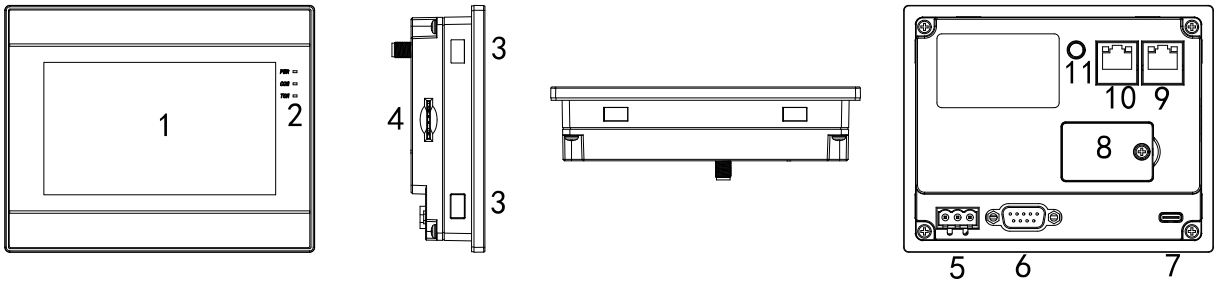

PI3041ig(N) Components description

1	LCD and touch screen	2	LED	3	Fixed buckle	4	SIM card slot (optional)
5	Power terminal	6	COM	7	TYPE-C	8	Battery
9	Ethernet 1	10	Ethernet 2	11	4G / WIFI antenna (optional)		

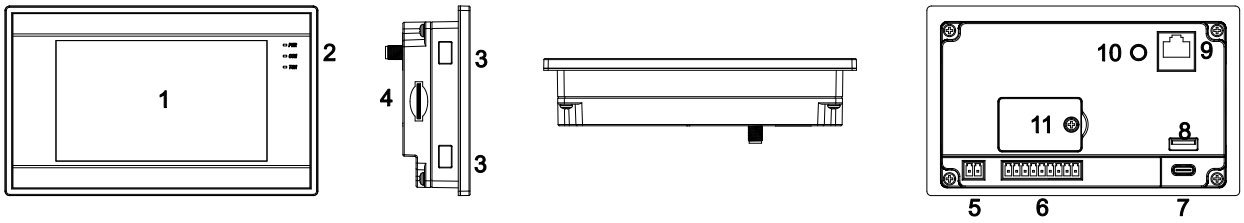

PI3043ig / PI8043ig Components description

1	LCD and touch screen	2	LED	3	Fixed buckle	4	SIM card slot (optional)
5	Power terminal	6	COM	7	TYPE-C	8	USB-A
9	Ethernet	10	4G / WIFI antenna (optional)	11	Battery		

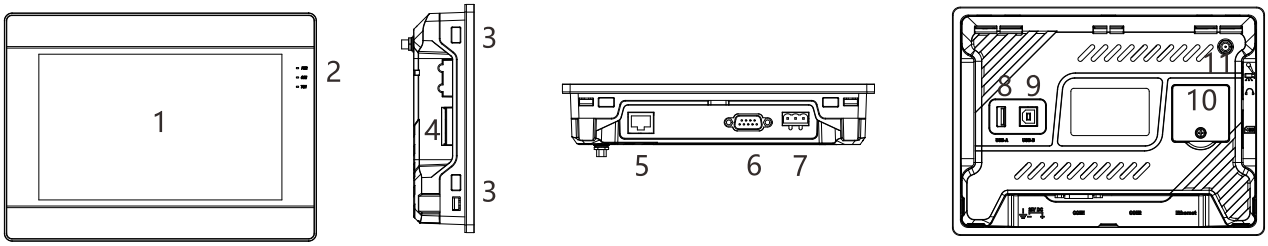

PI3070ig / PI8070ig Components description

1	LCD and touch screen	2	LED	3	Fixed buckle	4	SD card slot
5	Ethernet	6	COM	7	Power terminal	8	USB-A
9	USB-B	10	SIM card slot (optional)	11	4G / WIFI antenna (optional)		

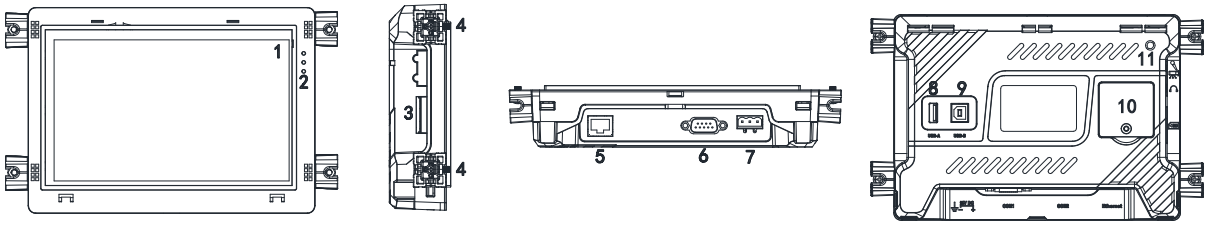

PI3070ig-SL Components description

1	LCD and touch screen	2	LED	3	SD card slot	4	Fixed buckle
5	Ethernet	6	COM	7	Power terminal	8	USB-A
9	USB-B	10	SIM card slot (optional)	11	4G / WIFI antenna (optional)		

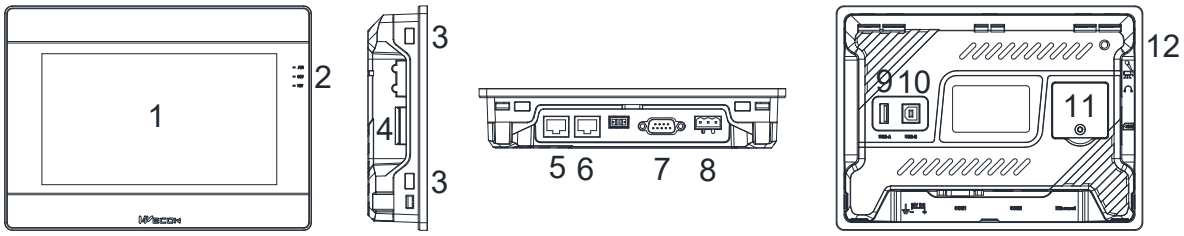

PI8070ig(N) Components description

1	LCD and touch screen	2	LED	3	Fixed buckle	4	SD card slot
5	Ethernet 2	6	Ethernet 1	7	COM	8	Power terminal
9	USB-A	10	USB-B	11	SIM card slot (optional)	12	4G / WIFI antenna (optional)

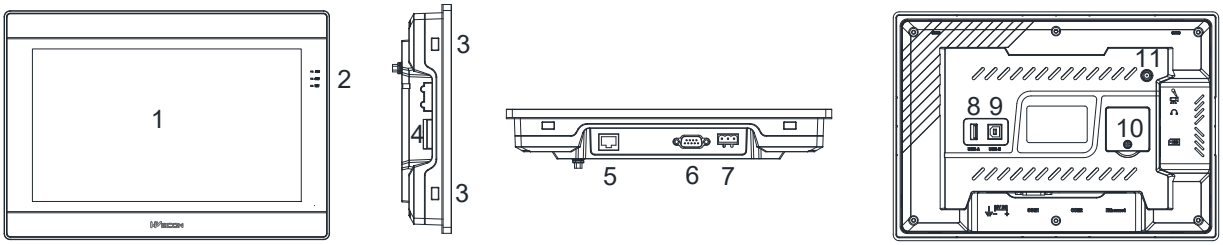

PI3102ig / PI8102ig Components description

1	LCD and touch screen	2	LED	3	Fixed buckle	4	SD card slot
5	Ethernet	6	COM	7	Power terminal	8	USB-A
9	USB-B	10	SIM card slot (optional)	11	4G / WIFI antenna (optional)		

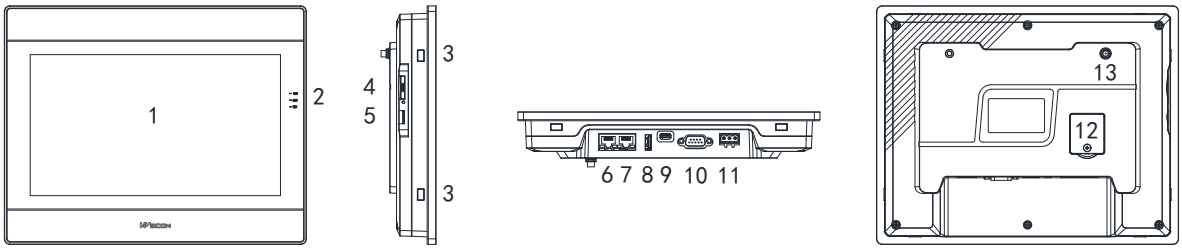

PI3101ig(N) / PI8101ig(N) Components description

1	LCD and touch screen	2	LED	3	Fixed buckle	4	SIM card slot (optional)
5	TF card slot	6	Ethernet 2	7	Ethernet 1	8	USB-A
9	TYPE-C	10	COM	11	Power terminal	12	Battery
13	4G / WIFI antenna (optional)						

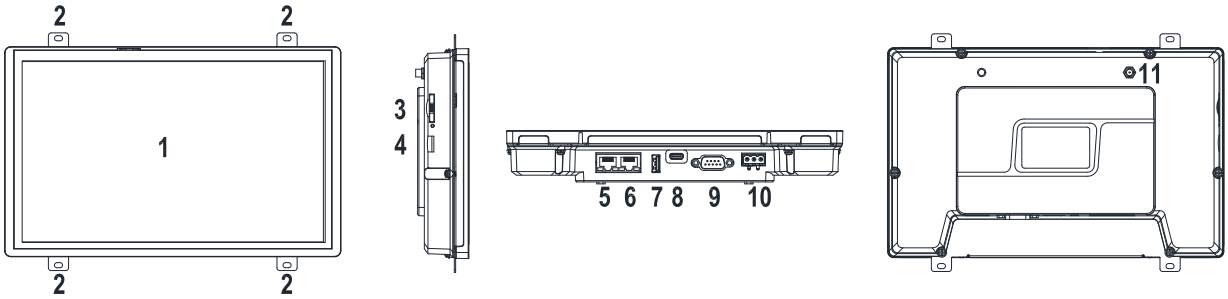

PI3101ig-WK Components description

1	LCD and touch screen	2	Fixing hole	3	SIM card slot (optional)	4	TF card slot
5	Ethernet 2	6	Ethernet 1	7	USB-A	8	TYPE-C
9	COM	10	Power terminal	11	4G / WIFI antenna (optional)		

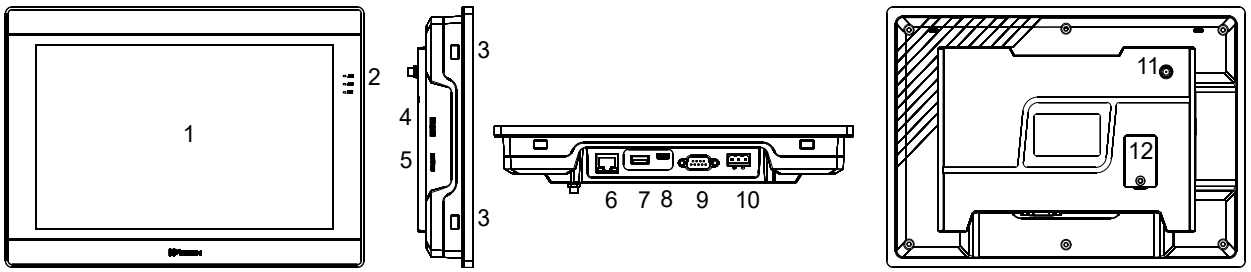

PI9102ig Components description

1	LCD and touch screen	2	LED	3	Fixed buckle	4	SIM card slot (optional))
5	TF card slot (optional))	6	Ethernet	7	USB-A	8	TYPE-C
9	COM	10	Power terminal	11	4G / WIFI antenna (optional)	12	Battery

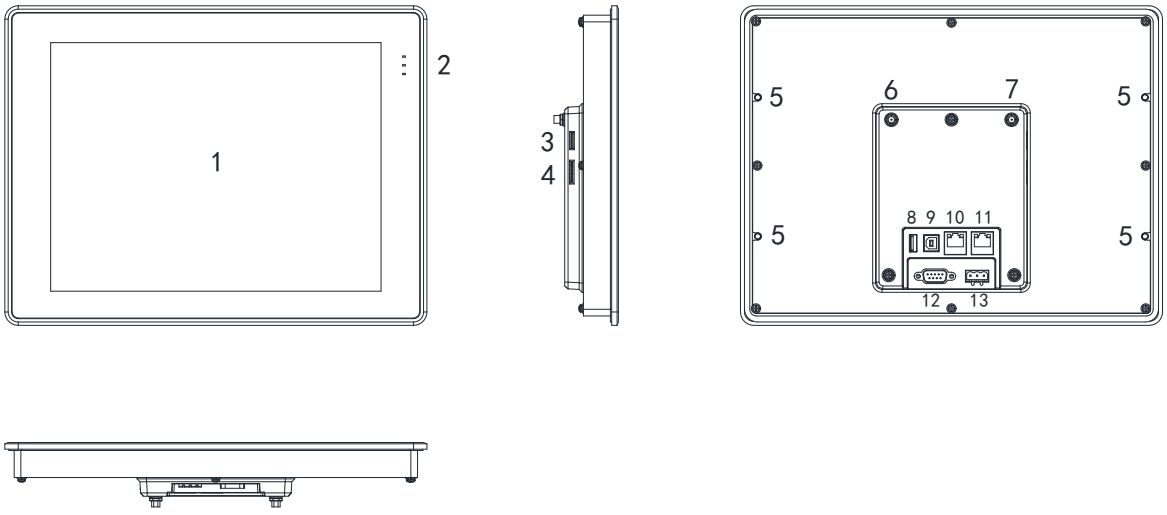

PI8121ig(N) Components description

1	LCD and touch screen	2	LED	3	TF card slot	4	SIM card slot (optional)
5	Fixed buckle	6	WIFI antenna (optional)	7	4G antenna (optional)	8	USB-A
9	USB-B	10	Ethernet 1	11	Ethernet 2	12	COM
13	Power terminal						

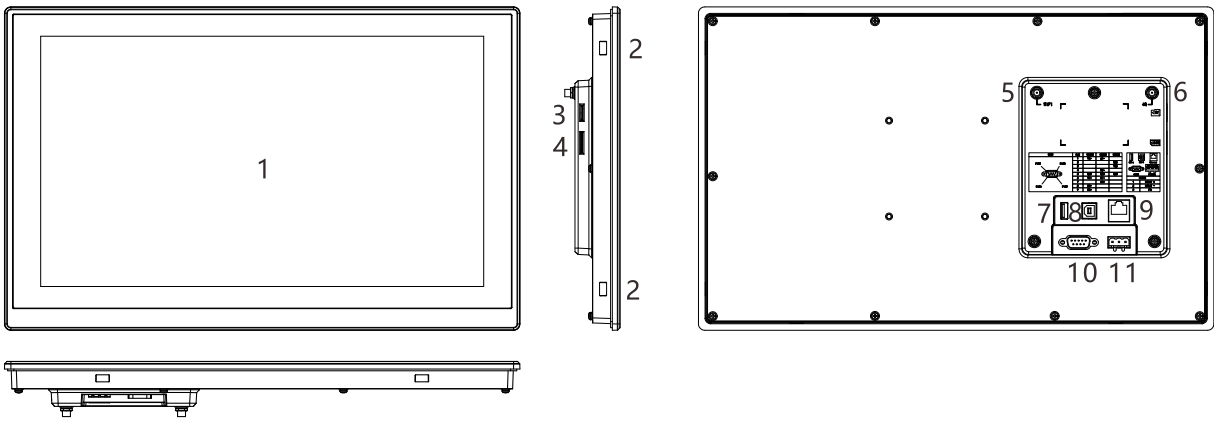

PI8150ig Components description

1	LCD and touch screen	2	Fixed buckle	3	TF card slot	4	SIM card slot (optional)
5	WIFI antenna (optional)	6	4G antenna (optional)	7	USB-A	8	USB-B
9	Ethernet	10	COM	11	Power terminal		

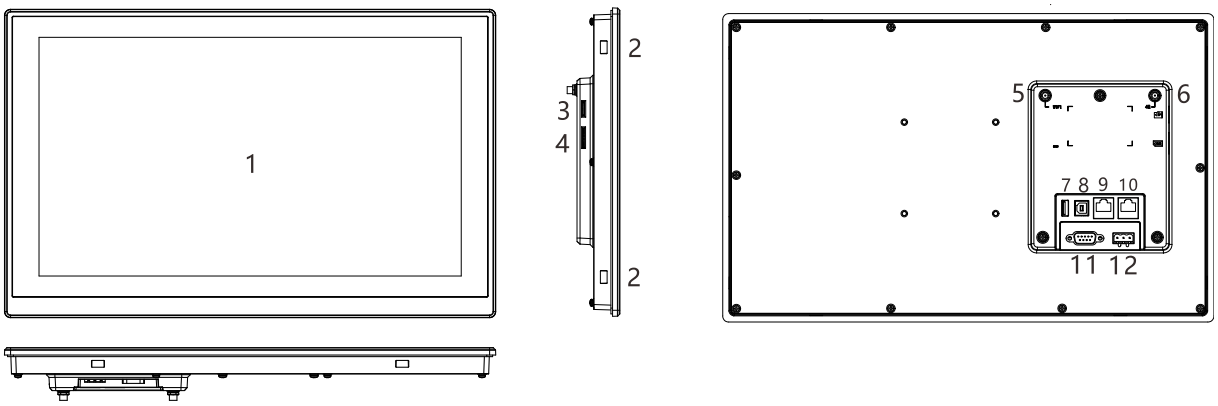

PI8150ig(N) Components description

1	LCD and touch screen	2	Fixed buckle	3	TF card slot	4	SIM card slot (optional)
5	WIFI antenna (optional)	6	4G antenna (optional)	7	USB-A	8	USB-B
9	Ethernet 1	10	Ethernet 2	11	COM	12	Power terminal

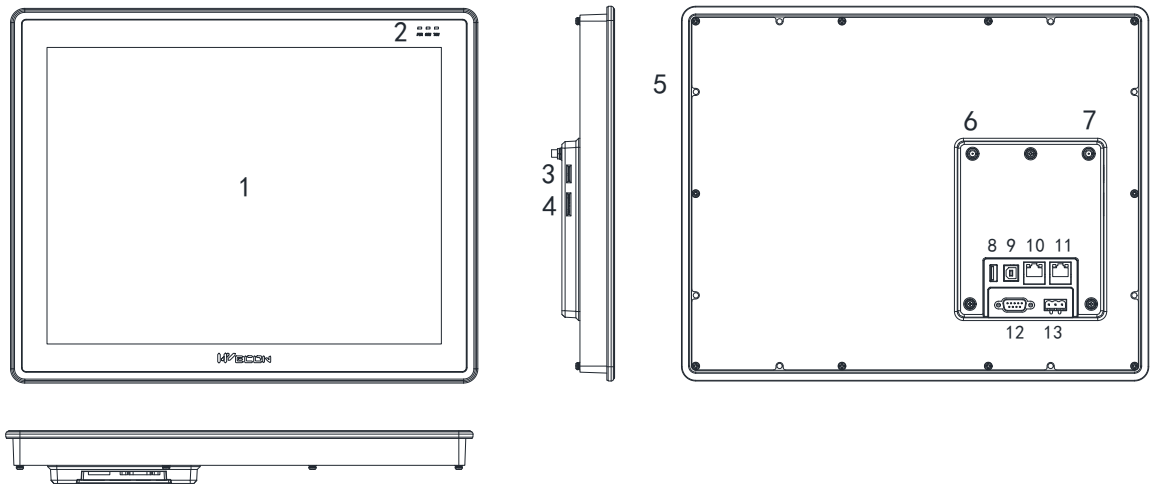

PI8151ig(N) Components description

1	LCD and touch screen	2	LED	3	TF card slot	4	SIM card slot (optional)
5	Fixed buckle	6	WIFI antenna (optional)	7	4G antenna (optional)	8	USB-A
9	USB-B	10	Ethernet 1	11	Ethernet 2	12	COM
13	Power terminal						

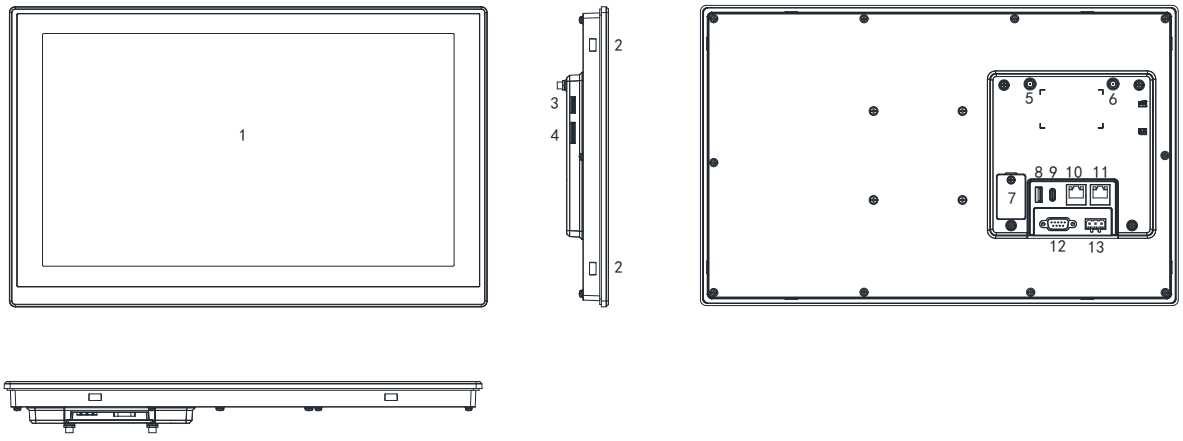

PI9150ig(N) Components description

1	LCD and touch screen	2	Fixed buckle	3	TF card slot	4	SIM card slot (optional)
5	WIFI antenna (optional)	6	4G antenna (optional)	7	Battery	8	USB-A
9	Type-C	10	Ethernet 1	11	Ethernet 2	12	COM
13	Power terminal						

The power interface is defined as follows (from left to right):

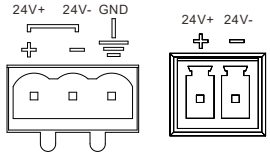

DC 24V+	DC24V-	GND

Part8 The Size of Product

Unit ： mm ， error range: ±0.5mm

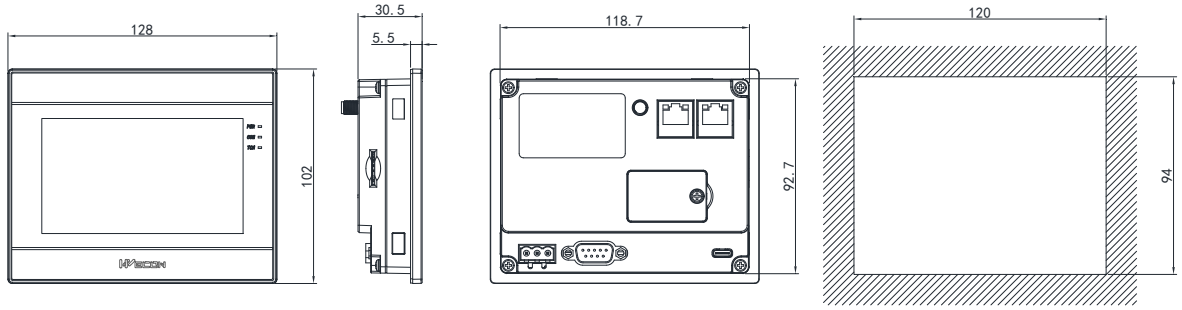

PI3041ig(N) installation size

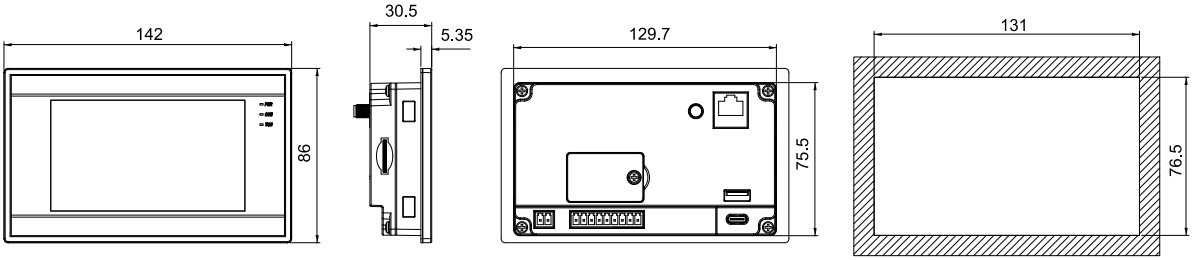

PI3043ig / PI8043ig installation size

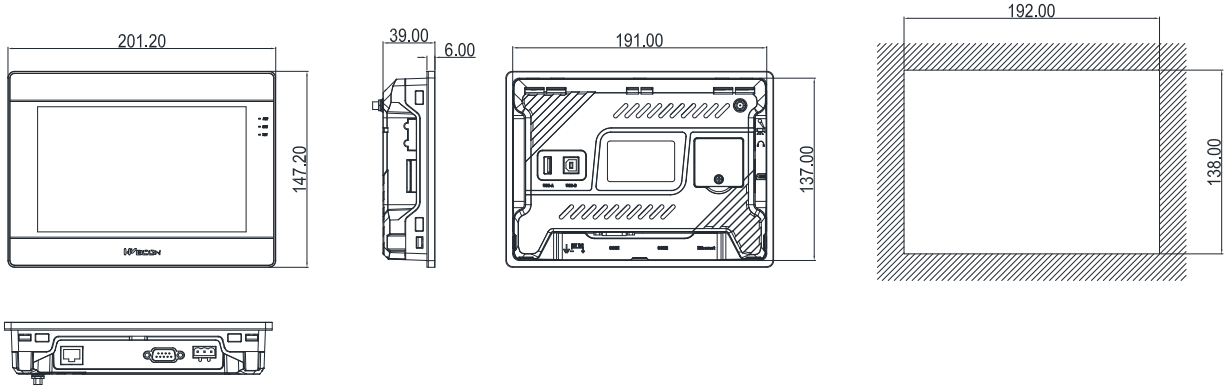

PI3070ig / PI8070ig /PI8070ig(N) installation size

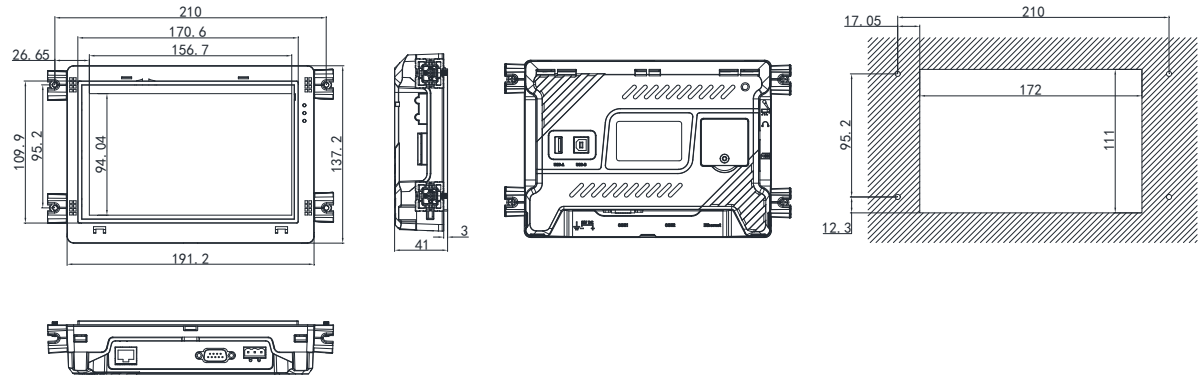

PI3070ig-SL installation size

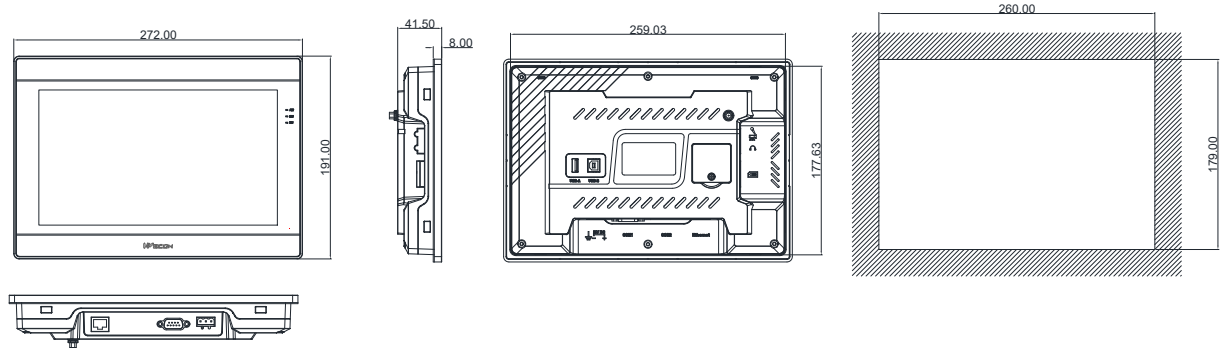

PI3102ig / PI8102ig installation size

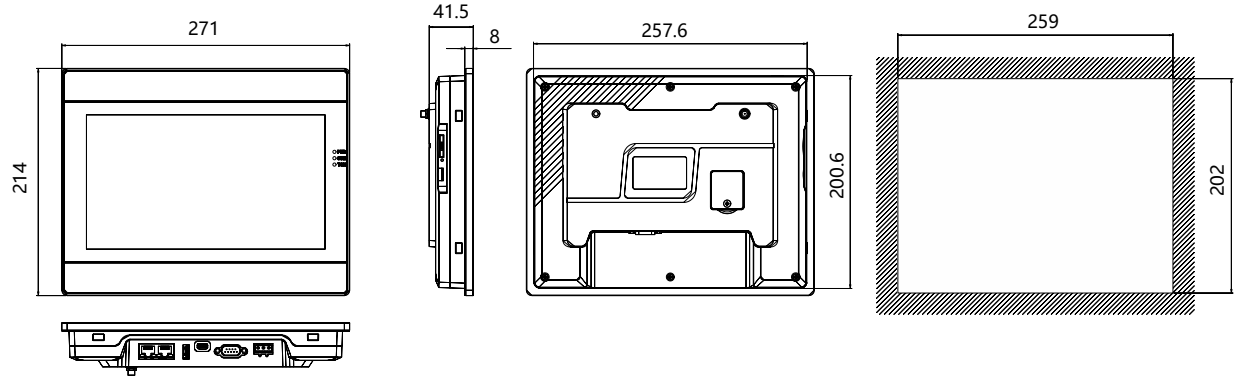

PI3101ig(N) / PI8101ig(N) installation size

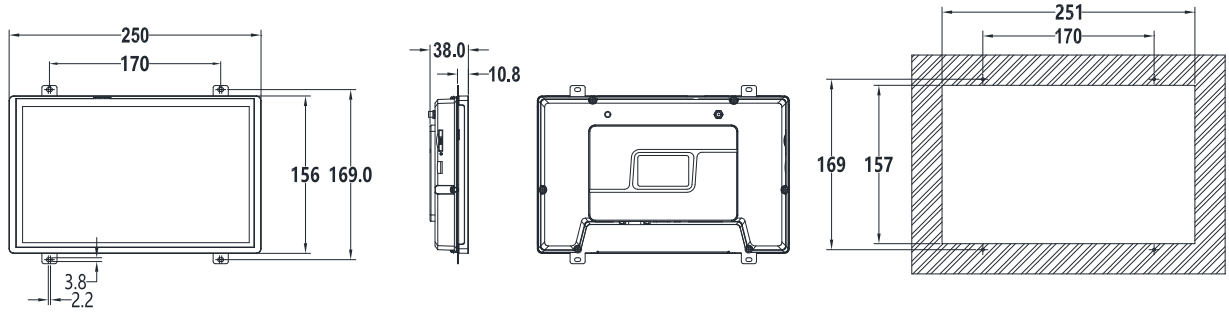

PI3101ig-WK installation size

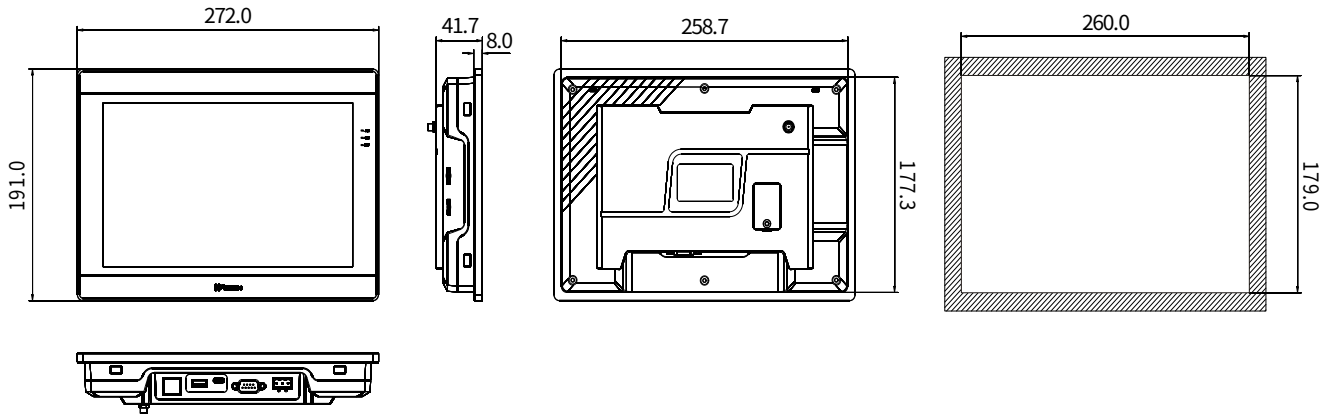

PI9102ig installation size

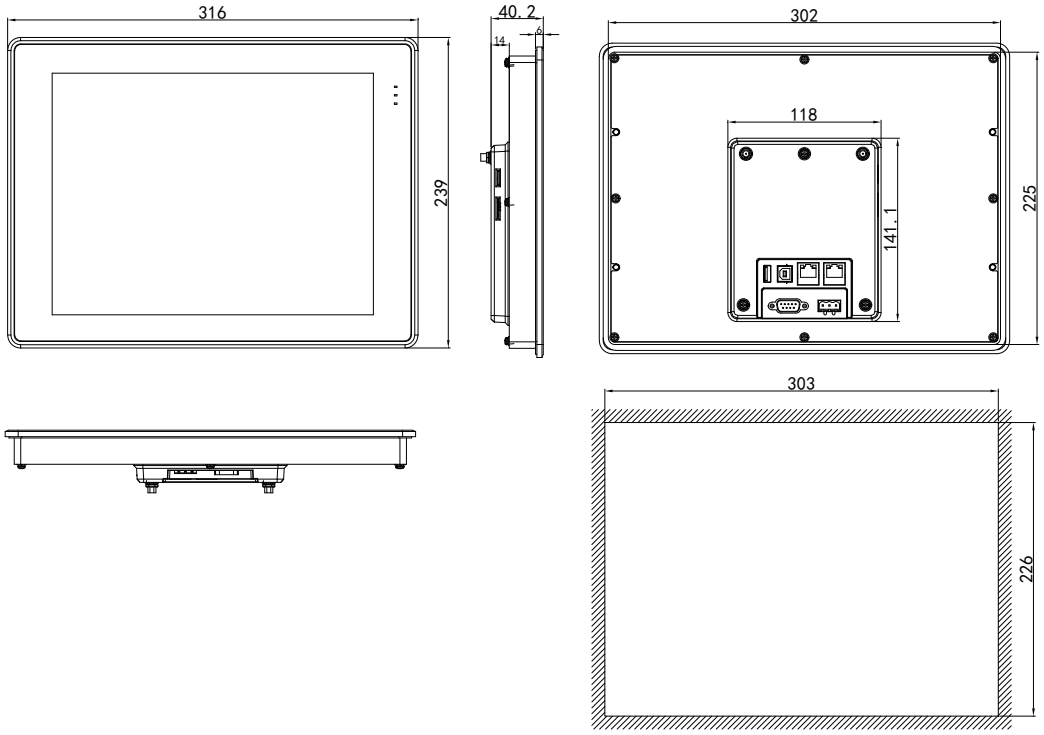

PI8121ig(N) installation size

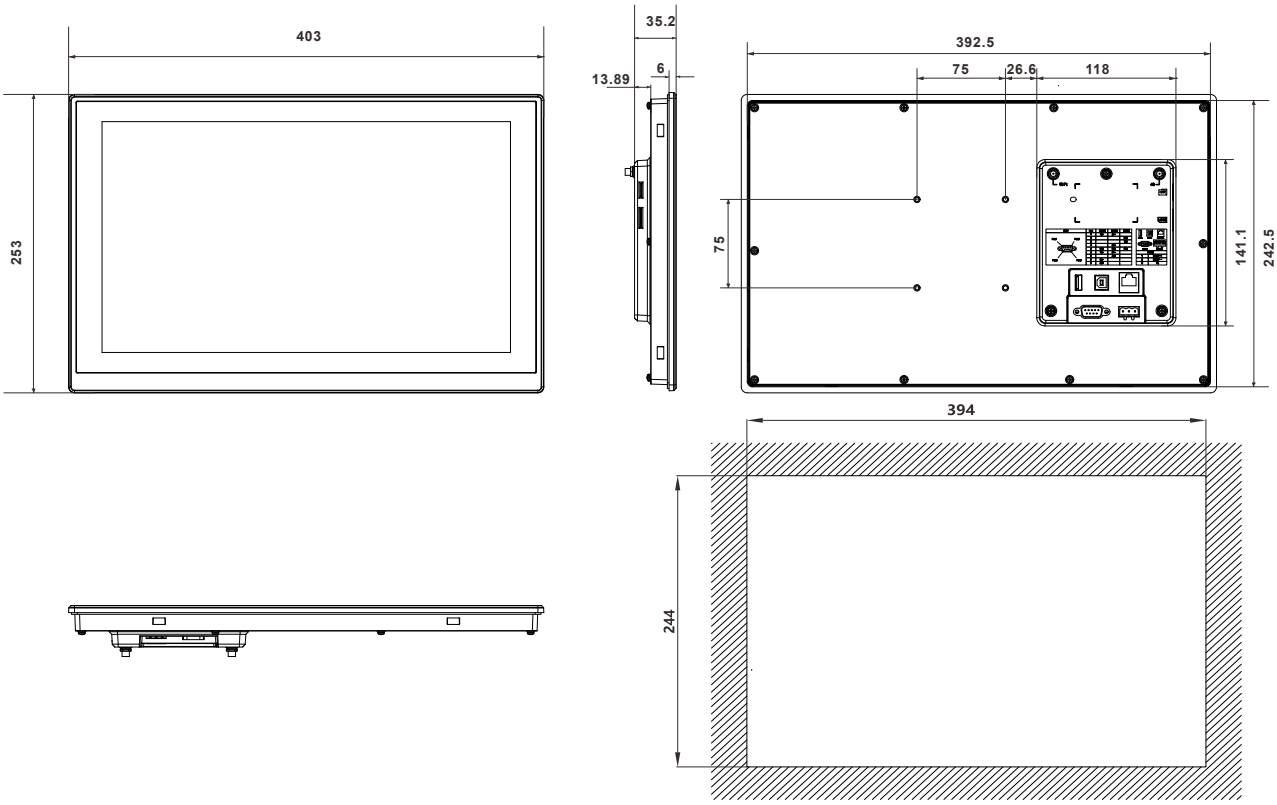

PI8150ig installation size

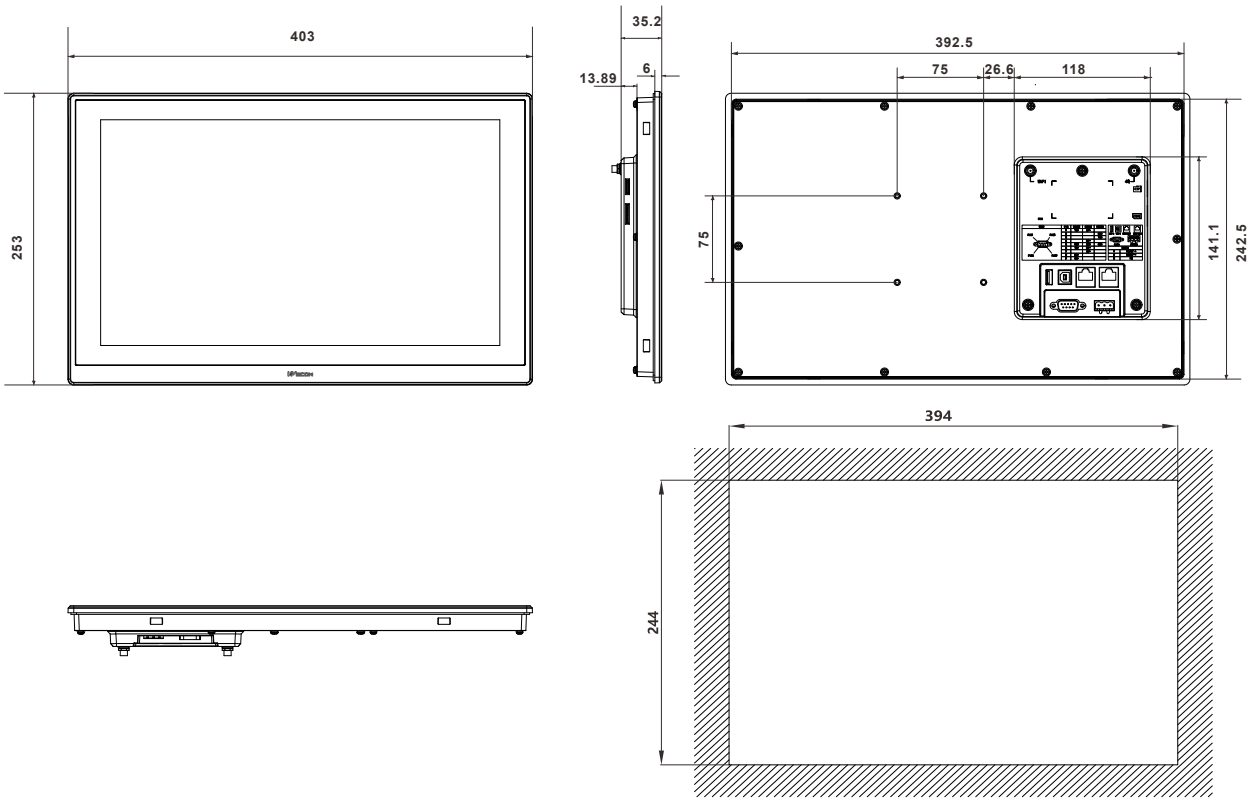

PI8150ig(N) installation size

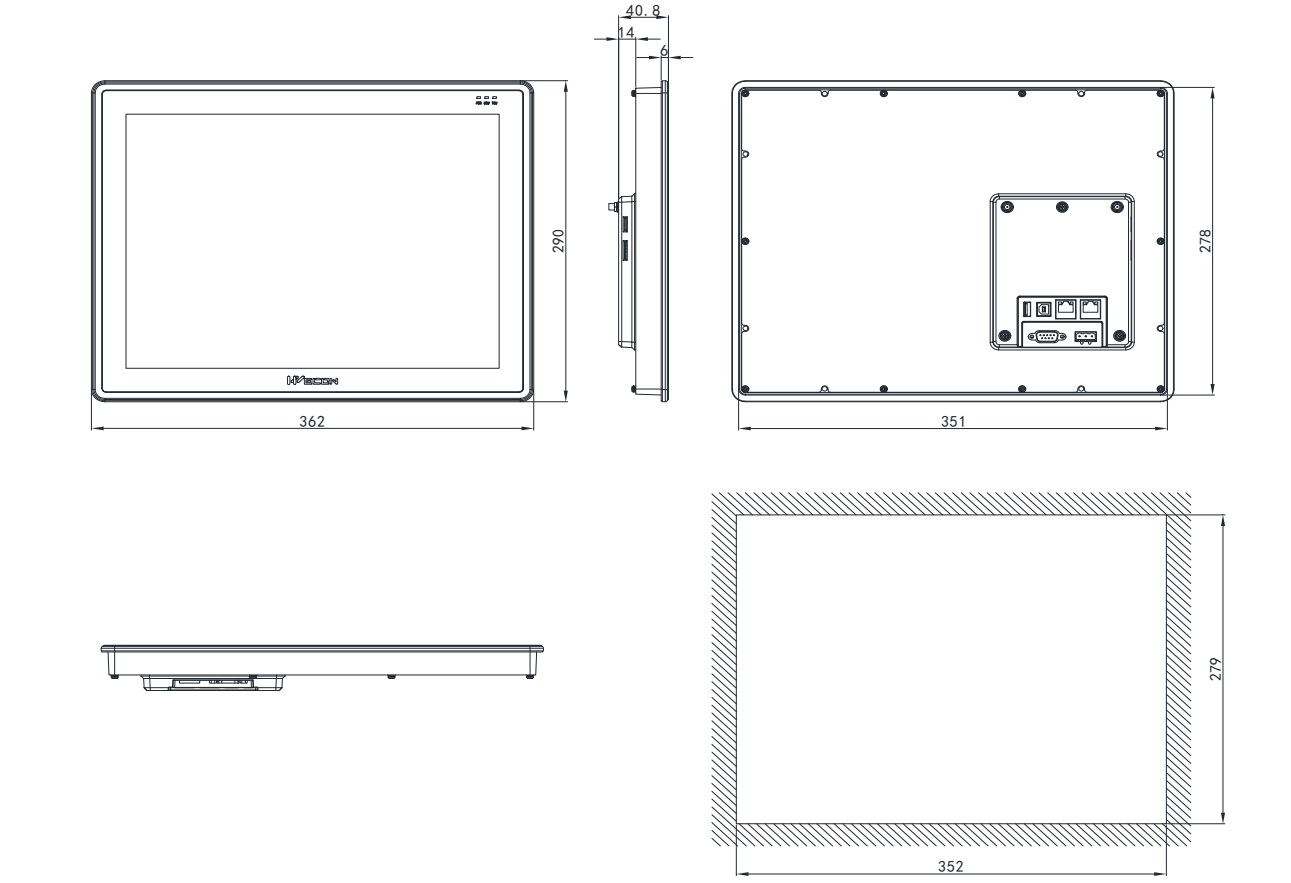

PI8151ig(N) installation size

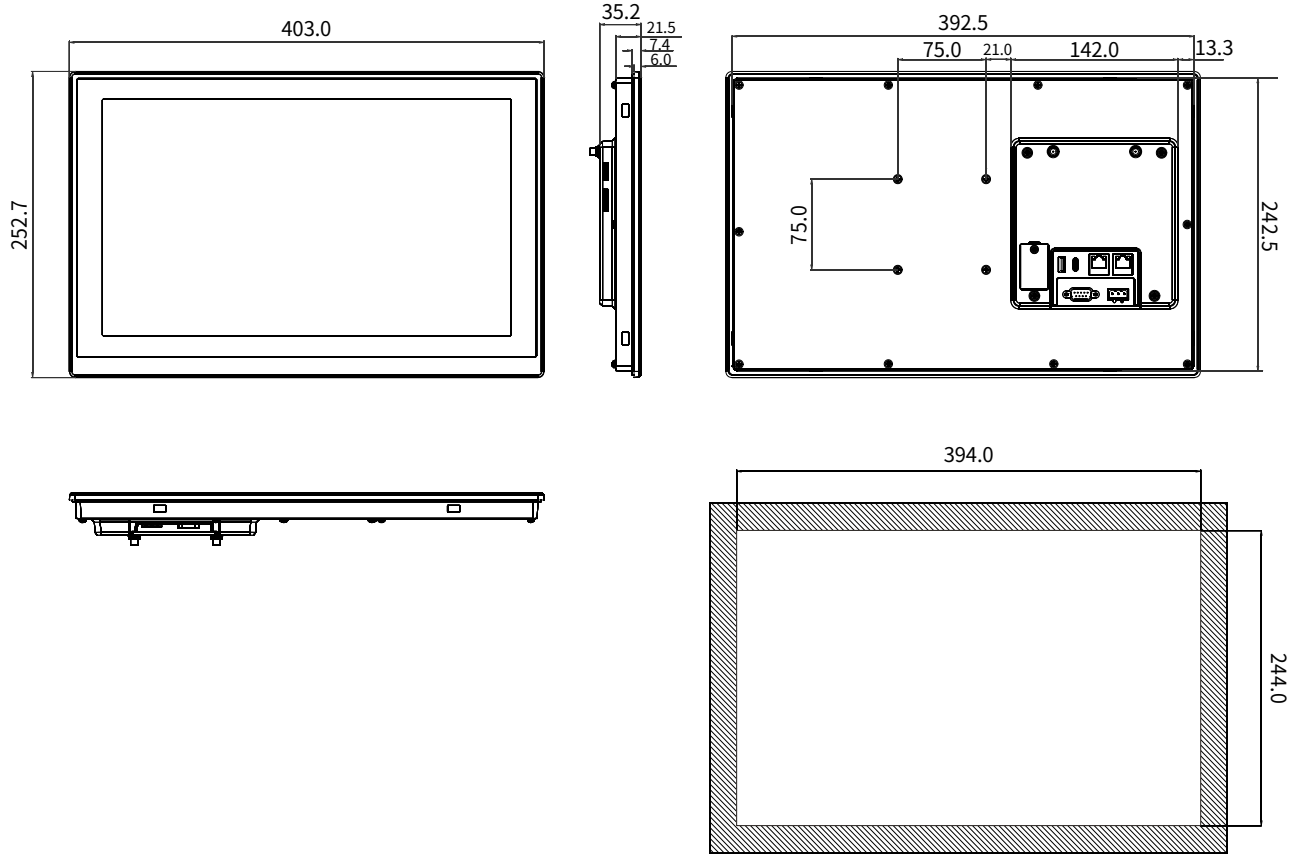

PI9150ig(N) installation size

Part 9 Touch Screen Calibration

After starting HMI, keep on pressing top left corner of screen about 3 to 5 seconds, an interface will appear as following:

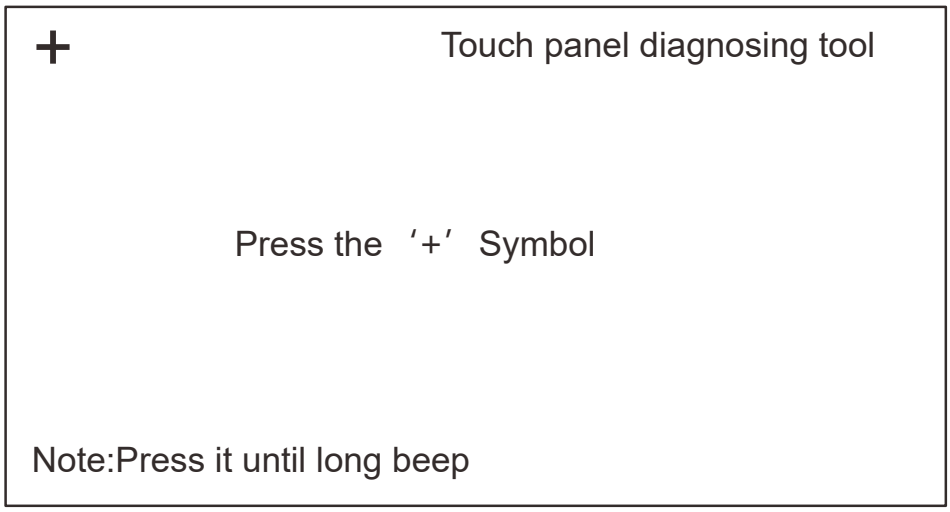

Click top left corner, top right corner, bottom right corner, bottom left corner and the center of ‘+’ in turn and restart.

Part 10 Parameters Setting

Keep on pressing top right corner of screen about 3 to 5 seconds, an interface will appear as following:

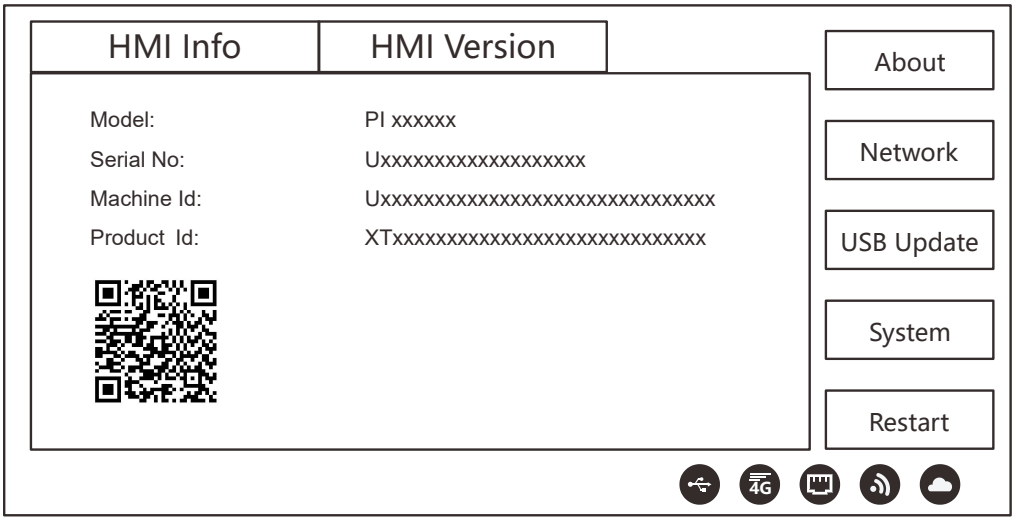

Part 11 Product Installation

Notes:

- The installation direction must be in accordance, otherwise it may lead to fault.
- In order to make circle effect greatly, adjacent objects and baffle should be kept on enough space when installation, otherwise it will cause bad cooling.
- Used in crust plane of Type 4X indoor grade.

Installation steps:

- Make sure the waterproof gasket is cased, and then install HMI to the adaptive crust.
- Make sure the fixed piece screw is cased, and then hitch front cover screw to withstand inside control box.
- Please tight screws aptly and remember not to exceed this torque, otherwise it will lead to crustaceous damage. Torque:6.17 lb-inch (0.7N-M)

Part 12 Interface Definition

PI3043ig / PI8043ig series interfaces

COM1 definition:

Pin	Definition	Pin	Definition
1	RS232 RXD	2	RS232 TXD
3	GND	4	RS422 TX+/RS485 A1+
5	RS422 TX-/RS485 B1-	6	RS422 RX+
7	RS422 RX-	8	RS485 A2+
9	RS485 B2-		

▲ Note: RS422 and RS485-1 cannot be used in the terminal block of PI3043ig / PI8043ig series HMI at the same time.

PI3041ig(N) / PI3070ig / PI3070ig-SL / PI8070ig / PI8070ig(N) / PI3102ig / PI8102ig / PI3101ig(N) / PI3101ig-WK / PI8101ig(N) / PI9102ig / PI8121ig(N) / PI8150ig / PI8150ig(N) / PI8151ig(N) / PI9150ig(N) series interfaces

COM1 definition:

Pin	Definition	Pin	Definition
1	RS422 TX +/RS485 A1 +	2	RS232 RXD
3	RS232 TXD	4	RS485 B2-
5	GND	6	RS422 TX-/RS485 B1-
7	RS485 A2+	8	RS422 RX-
9	RS422 RX+		

▲ Note:RS422 and RS485-1 cannot be used in COM1 port of PI3041ig(N) / PI3070ig / PI3070ig-SL / PI8070ig / PI8070ig(N) /PI3102ig / PI8102ig / PI3101ig(N) / PI3101ig-WK / PI8101ig(N) / PI9102ig / PI8121ig(N) /PI8150ig / PI8150ig(N) / PI8151ig(N) / PI9150ig(N) series HMI at the same time.

Notice

The contents of this manual are subject to change without notice.

维控科技®
WECONTECHNOLOGY
FUJIAN FUCAN WECON CO LTD

Address: Wecon Tech Park, No.58 Jiangbin East Avenue, Mawei, Fuzhou, China;
Tel: 400-799-8189;
Email: sales@we-con.com.cn;
Web: www.we-con.com.cn/en;

WECON_ig_20260120