WECON VB AC Drive

User Manual

Website: http://www.we-con.com.cn/en
Technical Support: support@we-con.com.cn
Skype: fcwkkj
Phone: 86-591-87868869
QQ Group: 465230233
Technical forum: http://wecon.freeforums.net/

Preface

Thank you for choosing WECON VB Series AC Drive.

This user manual introduces the technical specifications, installation instructions, functions and performance of VB Series AC Drive properly. Please read this user manual carefully before carrying out works such as installation, commissioning, maintenance, etc.

You are specially warned to read and understand safety precaution items of this manual before using this product, and to ensure that relevant electrical installation testers' professional qualification shall be in line with the provisions of the labor supervision department, and the electrical and environmental conditions for product use shall be in conformity with relevant national standards.

Be sure to verify that the wiring is correct before powering on the product. Before starting the product, it is necessary to debug to ensure correct motor rotating direction.

Contents

PREFACE ..... - 1 -

SAFETY PRECAUTIONS ..... - 4 -

CHAPTER 1 PRODUCT INFORMATION ..... - 6 -

1.1 TECHNICAL SPECIFICATIONS ..... - 6 -
1.2 PRODUCT NAMEPLATE ..... - 9 -
1.3 MODEL DESCRIPTION ..... - 9 -
1.4 PRODUCT MODEL ..... - 10 -

CHAPTER 2 INSTALLATION ..... - 12 -

2.1 OVERALL STRUCTURAL DRAWING（UNIT：MM） ..... - 12 -
2.2 KEYPAD STRUCTURAL DIMENSION DIAGRAM ..... - 15 -
2.3 MAIN CIRCUIT CONNECTION ..... - 16 -
2.4 CONTROL CIRCUIT CONNECTION ..... - 17 -
2.5 MACHINE INSTALLATION INTERVAL REQUIREMENTS ..... - 20 -

CHAPTER 3 DISPLAY AND OPERATION ..... - 23 -

3.1 KEYPAD ..... - 23 -
3.2 DESCRIPTION OF INDICATORS AND KEYS ..... - 24 -

CHAPTER 4 PARAMETER FUNCTION ..... - 25 -

4.1 FUNCTIONAL PARAMETER ..... - 25 -
4.2 FAULT RECORDS ..... - 50 -
4.3 MONITORING PARAMETERS ..... - 52 -

CHAPTER 5 COMMUNICATION PROTOCOL ..... - 54 -

5.1 COMMUNICATION CONTROL ADDRESS ..... - 54 -
5.2 PARAMETER STATUS ADDRESS ..... - 55 -
5.3 AC DRIVE STATE AND FAULT DESCRIPTION ..... - 57 -
5.4 EEPROM-RAM ADDRESS EXCHANGE DESCRIPTION ..... - 58 -

CHAPTER 6 TROUBLESHOOTING & COUNTERMEASURES - 59 -

6.1 FAULTS AND SOLUTIONS ..... - 59 -
6.2 COMMON FAULTS AND SOLUTIONS ..... - 62 -

CHAPTER 7 FUNCTIONAL PARAMETER DETAILS ..... - 63 -

F0 GROUP BASIC PARAMETERS ..... - 63 -
F1 GROUP START&STOP CONTROL ..... - 75 -
F2 GROUP MOTOR PARAMETERS ..... - 81 -
F3 GROUP VECTOR CONTROL PARAMETERS ..... - 84 -
F4 GROUP V/F CONTROL PARAMETERS ..... - 90 -
F5 GROUP INPUT TERMINALS ..... - 96 -
F6 GROUP OUTPUT TERMINALS ..... - 108 -
F7 GROUP KEYPAD DISPLAY ..... - 117 -
F8 GROUP AUXILIARY FUNCTIONS ..... - 121 -
F9 GROUP PID FUNCTION OF PROCESS CONTROL ..... - 133 -
FA GROUP FAULTS & PROTECTION ..... - 140 -
FB GROUP FREQUENCY SWING, LENGTH FIXING AND COUNTING ..... - 148 -
FC GROUP COMMUNICATION PARAMETERS ..... - 151 -
FD GROUP MUTI-STAGE SPEED AND SIMPLE PLC FUNCTIONS ..... - 153 -
FE GROUP USER PASSWORD MANAGEMENT ..... - 159 -
APPENDIX ..... - 159 -

Safety precautions

■ Warning sign

⚠ DANGER: Indicates that failure to comply with the notice will result in severe personal injure or even death.

⚠ WARNING: Indicates that failure to comply with the notice will result in moderate personal injury, property damage or equipment damage.

WARNING
◎Do not install or operate any AC Drive that is damaged or with missing parts. Failing to follow this rule can result in facility damage or severe injury.
◎ When installing or handling the AC Drive, please hold the bottom of the product rather than the case only, to prevent its falling and being damaged.
◎ Install the AC Drive on nonflammable material like metal, and keep away from flammable or explosive object, heat source, and similar environment. Otherwise, fire may be caused.
◎ When AC Drive is installed inside an electrical cabinet or other kind of enclosure, please install fans or other cooling devices, and keep ventilation well enough to ensure the enclosure temperature below 40℃, or the AC Drive may be damaged due to extreme high temperature.
◎ Before wiring, ensure the AC Drive rated input voltage and phases are compatible with the input power source, or fire or personal injury may be caused.
◎ Never connect the AC power supply to output terminals U, V and W. Otherwise, the AC Drive will be damaged and the warranty is invalid.
◎ Never carry out withstand voltage test to the AC Drive, for example by a megohmmeter. Otherwise, it may cause damage to the AC Drive.
◎The connecting cable of the main circuit terminal should use an insulating sleeve.
◎When the cable length between the AC Drive and the motor exceeds 50

meters, an output reactor is recommended to be used.

◎Do not use a circuit breaker to control the start and stop of the AC Drive. Otherwise, the AC Drive may be damaged.

◎ Since the AC Drive makes the motor running speed from low to high in a short time, please confirm that the motor and equipment are in the allowed running range before running.

◎Do not touch due to high temperature of the heat sink and braking resistor.

◎ The factory parameters of the AC Drive can meet the requirments of most equipment operation. Under normal circumstances, please do not modify the AC Drive parameters at will. Even if there is some special applications need to change the AC Drive parameters, only necessary parameters could be changed. Otherwise, AC Drive damage may be caused.

◎ The PCB board has a CMOS integrated circuit. Do not touch it with your hands, otherwise, static electricity will damage the PCB board.

DANGER

◎ Wiring must be completed by qualified professional electricians, otherwise, there may be electric shock or damage to the AC Drive.
◎ The power must be disconnected during wiring; otherwise, it may cause electric shock or fire.
◎ The grounding terminal should be effectively grounded; otherwise, the outer casing of the AC Drive may be energized.

◎ Do not touch the main circuit terminals, otherwise, it may cause electric shock.

◎ Terminals for brake resistor are (+) and PB. Do not wire to other terminals, otherwise, fire may be caused.

◎It is only allowed to power on the AC Drive after the wiring is finished and its cover is reinstalled. It is strictly prohibited to remove the cover of AC Drive while power is on. Otherwise, it may cause electric shock.

◎Before programming the AC Drive with fault auto reset or restart option after

power off, the mechanical device need to be implemented with safety protection measures first. Otherwise, personal injury will be caused.

◎" STOP/RESET" key may become invalid as a result of some function setting. It is recommended to install an independent emergency circuit breaker for the AC Drive control system, otherwise, or personal injury may be caused.

◎When the power is on, there may be electricity in the AC Drive's terminals even if it is in stop mode. Do not touch U, V, W terminals and motor connection terminals, or electrical shock may be caused.

◎Never touch the AC Drive connection terminals when power is on. Otherwise, it may cause an electrical shock.

◎Only qualified electricians can be authorized to do the jobs of maintenance, checking, or parts replacement.

◎After the power supply is OFF, make sure the charge LED is OFF and the residual voltage does not exist, or wait for at least 10 minutes before carrying out maintenance or inspection. Otherwise, damage or injury may be caused.

◎Modification to the AC Drive without permission is strictly prohibited, otherwise, severe injury may be caused. Arbitrarily modification of AC Drive will result in service warranty invalid.

Chapter 1 Product information

1.1 Technical specifications

Item		Specifications	
Control	Control mode	Sensorless vector control（SVC）	V/F control

Item		Specifications	
features	Startup torque	0.5Hz/150%	0.5Hz/100%
	Speed range	1：100	1：50
	Speed stability accuracy	±0.5%	±1%
	Carrier frequency	0.5kHz ～ 16kHz; the carrier frequency is automatically adjusted based on the load features.	
	Overload capacity	G type: 60s for 150% of the rated current, 1s for 180% of the rated current. P type: 60s for 120% of the rated current, 1s for 150% of the rated current.	
	Torque boost	Fixed boost; Customized boost 0.1%～30.0%.	
Input and Output	Input voltage range	220V/380V(±15%); 440V/415V(±10%)	
	Input frequency range	50/60Hz；fluctuation range :±5%	
	Output voltage range	0-input voltage; the error is less than 5%	
	Output frequency range	SVC：0-320Hz；V/F：0-1000Hz	
Running control	Running command source	Three command source： keypad; control terminals; serial communication port. You can perform switchover between these sources in various ways.	
	Frequency source	There are 10 frequency sources in total, such as digital setting, analog voltage setting, analog current setting, pulse setting and serial communication port setting. You can perform switchover between these sources in various ways.	
	Auxiliary frequency source	There are ten auxiliary frequency sources. It can implement fine tuning of auxiliary frequency and frequency synthesis.	
	Input terminal	◆ 6 digital input terminals (DI), ◆ 2 analog input terminals (AI).	
	Output terminal	◆ 1 open-collector output terminal ◆ 2 relay output terminal. ◆ 2 analog output terminal .	
Basic function	DC braking	Braking time: 0.0s ～ 100.0s; Braking action current value: 0.0% ～ 100.0%	
	V/F curve	Three modes: straight-line V/F curve, multi-point V/F curve, square V/F curve.	
	Ramp mode	Straight-line ramp, S-curve ramp; Four kinds of acceleration/deceleration time with the range of	

Item		Specifications
		0.0-6500.0s.
	Simple PLC/Multiple speeds	It implements up to 16 speeds via the simple PLC function or combination of DI terminal states.
	Built-in PID	It realizes process-controlled closed loop control system easily.
	AVR function	It can keep constant output voltage automatically when the mains voltage changes.
	Overvoltage/Overcurrent stall control	The current and voltage are limited automatically during the running process so as to avoid frequent tripping due to overvoltage and overcurrent.
	Rapid current limit	It helps to avoid frequent overcurrent faults of the AC Drive.
	Torque limit and control	It can limit the torque automatically and prevent frequent over current tripping during the running process.
	Timing control	Timing control function: time range: 0h ～ 65535h
	Protection mode	Motor short-circuit detection at power-on, input/output phase loss protection, overcurrent protection, overvoltage protection, undervoltage protection, overheat protection, overload protection and so on.
Display and Key operation	LED display	It displays the parameters.
	Parameters locking function	It can lock the parameters to prevent malfunction.
	MF.K key	Programmable key: command source switchover/ forward and reverse running/ JOG running/menu mode switchover
Environment	Installation location	Indoor, free from direct sunlight, dust, corrosive gas, combustible gas, oil smoke, vapour, drip or salt.
	Altitude	Lower than 1000m. When it is higher than 1000m, for every 100m, it needs to reduce power by 1%, and the maximum altitude is 3000m.
	Ambient temperature	-10℃～ 40℃. When it is higher than 40℃, for every 1℃, it needs to reduce power by 1%, and the maximum ambient temperature is 50℃
	Humidity	≤95%RH, without condensing
	Vibration	Less than 5.9m/s2 (0.6g)
	Storage temperature	-25℃～+60℃

Table 1-1-1 Technical specification

1.2 Product nameplate

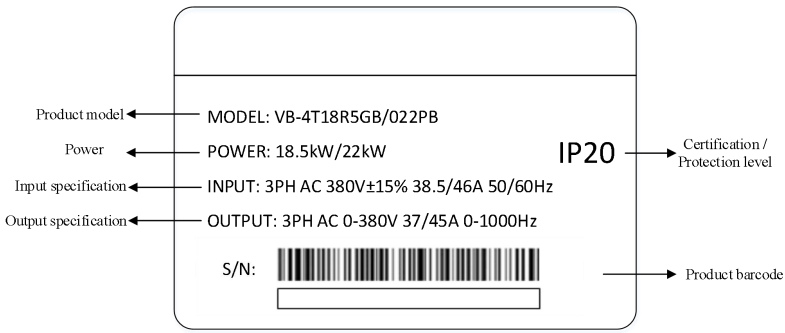

Figure 1-2-1 Product nameplate

1.3 Model description

VB - 4 T 18R5GB / 022PB
① ② ③ ④ ⑤

Field	No.	Identification	Description
Product series	①	Product series	VB: general vector series
Voltage grade	②	Voltage grade	2: 220VAC 4: 380VAC(Compatible with 440VAC)
The input power	③	Power phase identification	S: single ; T: three-phase
Rated power 1	④	The power range of G type	18R5：18.5kW，R is the decimal point G—Constant torque load B—Built-in brake unit
Rated power 2	⑤	The power range of P type	022：22kW P—Variable torque load B—Built-in brake unit

Table 1-3-1 VB series model field comment

1.4 Product model

AC Drive Model	Rated power	Power capacity	Input current	Output current	Motor G/P	
	kW	kVA	A	A	kW	HP
Single phase 220VAV						
VB-2SR75GB	0.75	1.5	8.2	4.5	0.75	1
VB-2S1R5GB	1.5	3	14	7	1.5	2
VB-2S2R2GB	2.2	4	23	9.6	2.2	3
Three phase 380VAV(Compatible with 440VAC)						
VB-4TR75GB	0.75	1.5	3.4	2.1	0.75	1
VB-4T1R5GB	1.5	3	5.0	3.8	1.5	2
VB-4T2R2GB	2.2	4	5.8	5.1	2.2	3
VB-4T004GB/5R5PB	4/5.5	5.9/8.9	10.5/14.6	9/13	4/5.5	5.5/7.5
VB-4T5R5GB/7R5PB	5.5/7.5	8.9/11	14.6/20.5	13/17	5.5/7.5	7.5/10
VB-4T7R5GB	7.5	11	20.5	17	7.5	10.2
VB-4T011GB/015PB	11/15	17/21	26/35	25/32	11/15	15/20
VB-4T015GB/18R5PB	15/18.5	21/24	35/38.5	32/37	15/18.5	20/25
VB-4T18R5GB/022PB	18.5/22	24/30	38.5/46	37/45	18.5/22	25/30
VB-4T022GB/030PB	22/30	30/40	46.5/62	45/60	22/30	30/40
VB-4T030G/037P	30/37	40/57	62/76	60/75	30/37	40/50
VB-4T037G/045P	37/45	57/69	76/92	75/91	37/45	50/60
VB-4T045G/055P	45/55	69/85	92/113	91/110	45/55	60/70
VB-4T055G/075P	55/75	85/114	113/157	112/150	55/75	70/100
VB-4T075G/093P	75/93	114/134	157/180	150/170	75/90	100/125
VB-4T093G/110P	93/110	134/160	180/214	170/210	90/110	125/150
VB-4T110G/132P	110/132	160/192	214/256	210/253	110/132	150/180

AC Drive Model	Rated power	Power capacity	Input current	Output current	Motor G/P	
	kW	kVA	A	A	kW	HP
VB-4T132G/160P	132/160	192/231	256/307	253/304	132/160	180/220
VB-4T160G/185P	160/185	231/245	307/345	304/340	160/185	220/255
VB-4T185G/200P	185/200	245/260	345/385	340/377	185/200	255/275
VB-4T200G/220P	200/220	260/280	385/430	377/426	200/220	275/300
VB-4T220G/250P	220/250	280/355	430/468	426/465	220/250	300/340
VB-4T250G/280P	250/280	355/396	468/525	465/520	250/280	340/380
VB-4T280G/315P	280/315	396/445	525/590	520/585	280/315	380/430
VB-4T315G/355P	315/355	445/500	590/665	585/650	315/355	430/480
VB-4T355G/400P	355/400	500/565	665/785	650/725	355/400	480/545
VB-4T400G	400	565	785	725	400	545

Table 1-4-1 Product model table

Chapter 2 Installation

2.1 Overall structural drawing（unit：mm）

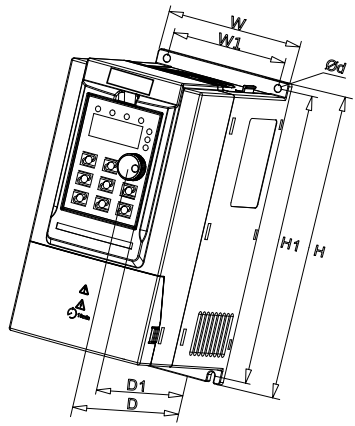

Figure 2-1-1 0.75kW-7.5kW outline dimension diagram

AC Drive Model	Overall Dimensions				Mounting Hole		Mounting Hole Diameter
	H	W	D	D1	H1	W1	d
VB-2SR75GB	187	88	138	130	177	73	5
VB-2S1R5GB							
VB-2S2R2GB							
VB-4TR75GB							
VB-4T1R5GB							
VB-4T2R2GB							
VB-4T004GB/5R5PB	207	100	147	139	197	85	5
VB-4T5R5GB/7R5PB	247	130	167	159	237	113	5
VB-4T7R5GB							

Table 2-1-1 0.75kW-7.5kW outline dimension

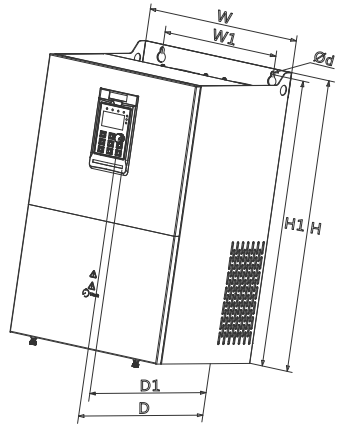

Figure 2-1-2 11kW-110kW outline dimension diagram

AC Drive Model	Overall Dimensions				Mounting Hole		Mounting Hole Diameter
	H	W	D	D1	H1	W1	d
VB-4T011GB/015PB	348	182	211	196	331	156	6
VB-4T015GB/18R5PB							
VB-4T18R5GB/022PB	373	220	205	190	356	156	6
VB-4T022GB/030PB							
VB-4T030G/037P	435	256	222	208	419	170	6
VB-4T037G/045P							
VB-4T045G/055P	543	310	280	265	523	245	10
VB-4T055G/075P							
VB-4T075G/093P	580	358	328	314	560	270	10
VB-4T093G/110P							
VB-4T110G/132P							

Table 2-1-2 11kW-110kW outline dimension

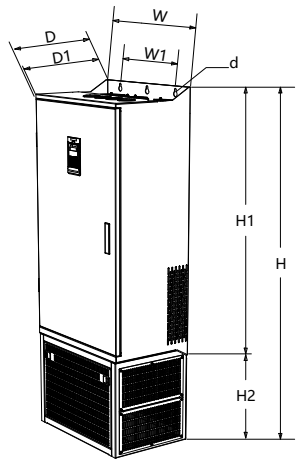

Figure 2-1-3 132kW-400kW outline dimension diagram

AC Drive Model	Overall Dimensions					Mounting Hole		Mounting Hole Diameter
	H	H2	W	D	D1	H1	W1	d
VB-4T132G/160P	1199	350	502	355	342	842	320	10
VB-4T160G/185P								
VB-4T185G/200P								
VB-4T200G/220P	1570	426	600	408	398	1147	400	12
VB-4T220G/250P								
VB-4T250G/280P								
VB-4T280G/315P								
VB-4T315G/355P	1696	426	800	408	398	1266	520	12
VB-4T355G/400P								
VB-4T400G								

Table 2-1-3 132kW-400kW outline dimension

Note： The standard configuration of 132kW-185kW does not include base bracket. Please specify when ordering if necessary.

2.2 Keypad structural dimension diagram

■ Keypad size（Unit: mm）

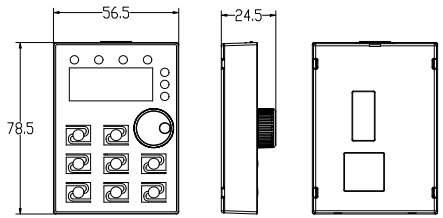

Figure 2-2-1 0.75kW-7.5kW Keypad structure size

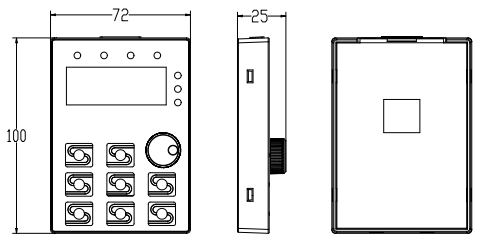

Figure 2-2-2 11kW-400kW Keypad structure size

■ Keypad bracket （Unit：mm）

Power range	0. 75kW-7. 5kW	11kW-400kW
Hole size	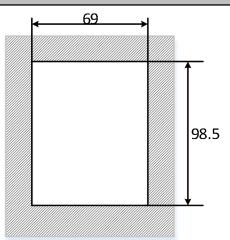	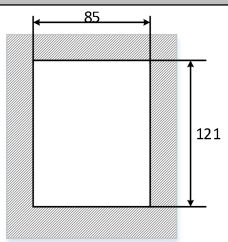

Table 2-2-1 The keypad bracket mounting hole size

2.3 Main circuit connection

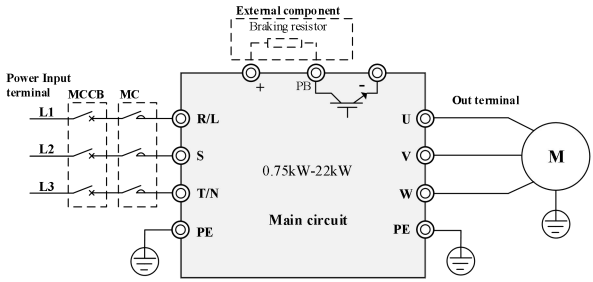

Figure 2-3-1 0.75kW-22kW main circuit wiring diagram

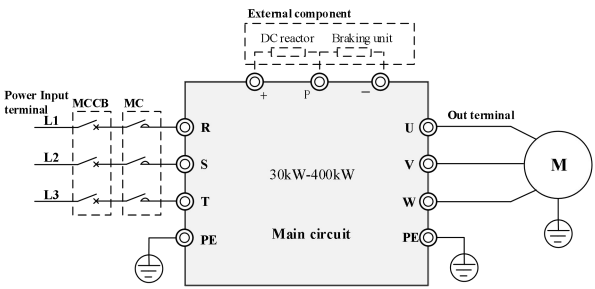

Figure 2-3-2 30kW-400kW main circuit wiring diagram

Terminal mark	Name	Description
R/L、S、T/N	Power supply input terminals	Connect to the AC power supply
(+)、(-)	Positive and negative terminals of DC bus	Common DC busbar input terminal Connect the external braking unit to the AC drive of 30 kW and above Power Range
(+)、PB	Brake resistance connecting terminal.	Connect to the braking resistor for the AC drive of 22 kW and below Power Range
P、(+)	Connecting terminals of external reactor	Connect to an external reactor.
U、V、W	AC drive output terminals	Connect the three-phase motor.
⏚	Grounding terminal	Must be grounded.

Table 2-3-1 Main circuit terminals and function

2. 4 Control circuit connection

■ 0.75kW-7.5kW control terminal

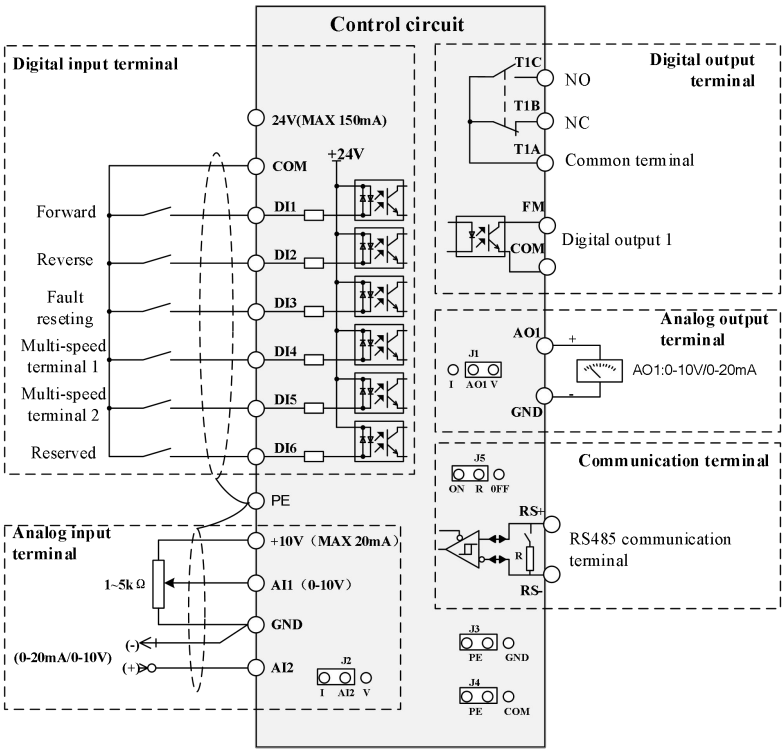

Figure 2-4-1 0.75kW-7.5kW control terminal diagram

■ 11kW-400kW control terminal

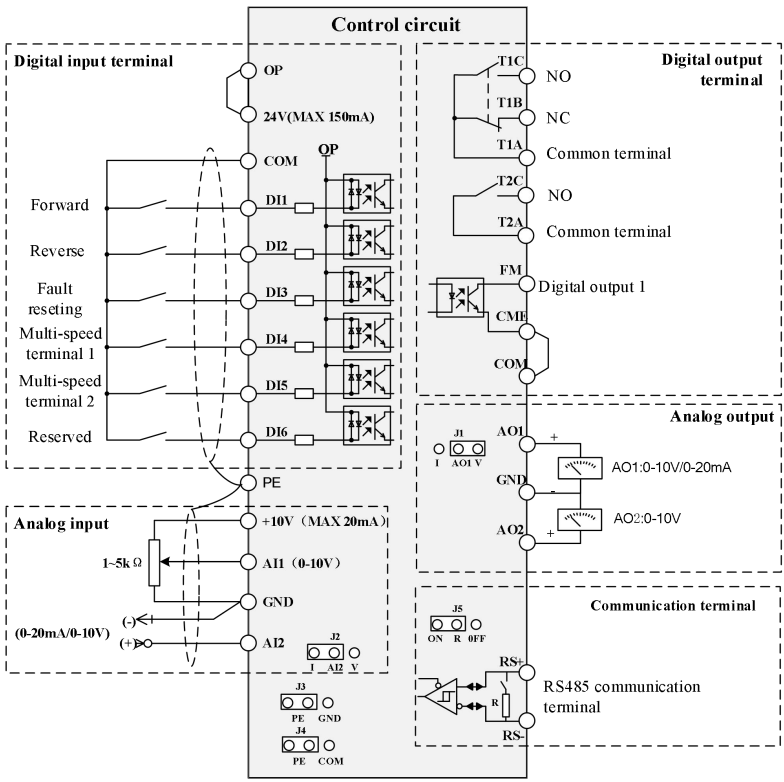

Figure 2-4-2 11kW-400kW control terminal diagram

■ Control terminal instruction

Category	Terminal symbol	Terminal name	Function description
Power supply	+10V-GND	＋10V power supply	Provide +10V power supply to external unit. Generally, it provides power supply to external potentiometer with resistance range of 1-5 kΩ. Maximum output current: 20 mA
	+24V-COM	＋24V power supply	Provide +24V power supply to external unit. Generally, it provides power supply to DI/DO terminals and external sensors.
	OP	External power input terminal	Connect to +24V by default. When DI1-DI6 need to be driven by extemal signal, OP needs to be connected to external power supply and be disconnected from +24V.
Analog input	AI1-GND	Analog input terminal 1	1. Input voltage range: 0-10V 2. Input resistance: 22 kΩ
	AI2-GND	Analog input terminal 2	1. Input range: 0-10V/4-20mA, decided by jumper J8 on the control board. 2. Input resistance: 22 kΩ(voltage input), 500Ω(current input)
Digital input	DI1	Digital input 1	1. Optical coupling isolation, compatible with dual polarity input 2. Input resistance: 3kΩ 3. Voltage range for level input: 9V -30V
	DI2	Digital input 2	
	DI3	Digital input 3	
	DI4	Digital input 4	
	DI5	Digital input 5	
	DI6	Digital input 6	
Analog output	AO1-GND	Analog output 1	AO1: Voltage or current output is decided by jumper J5. Output voltage range: 0-10V Output current range: 0-20mA
	AO2-GND	Analog output 2	AO2: Output voltage range: 0-10V
Digital output	FM-CME	Digital output/high-speed pulse output	open collector output Output voltage range: 0V -24V Output current range: 0mA - 50mA Note that CME and COM are internally insulated, but they are shorted by jumper externally. If you want to drive FM by

Category	Terminal symbol	Terminal name	Function description
			external power supply, Please remove the jumper.
Relay output	T1A-T1B	NO terminal	Contact driving capacity: AC 250V，3A，COSø=0.4； DC 30V，1A。
	T1A-T1C	NC terminal	
	T2A-T2C	NO terminal	
Communication port and socket		RS+	RS485 signal positive terminal
		RS-	RS485 signal negative terminal

Table 2-4-1 Control terminal instruction

2. 5 Machine installation interval requirements

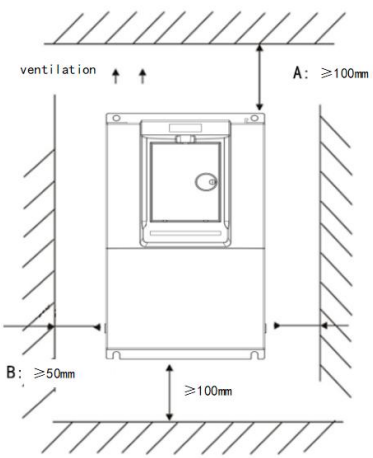

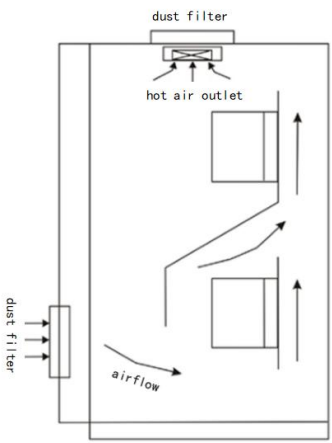

Note: The minimum installation distance of A is 100mm, and the minimum installation distance of B is 50mm; Reasonably increase the interval size as the power increases.

2.6 PNP signal board：

The control signals of VB series products are compatible with both NPN and PNP signal types.

■ Scheme

Control Board Type	Small Control Board	Large Control Board
Adapted power	220V：0.75-2.2kW 380V：0.75-7.5kW	380V：11-400kW
NPN signal	Default Compatible	Default Compatible
PNP signal	Add expansion board	Changing OP terminal

Add an expansion card for PNP signal compatibility for small control boards

■ Introduce of expansion board

Name：PNP signal compatible expansion board

Picture：



Application Principle：For example

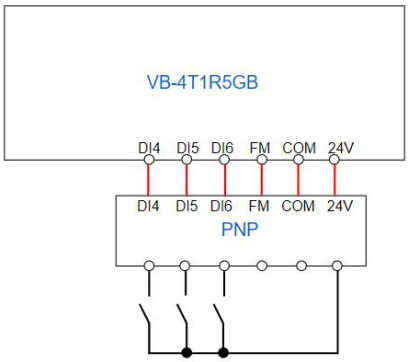

Or

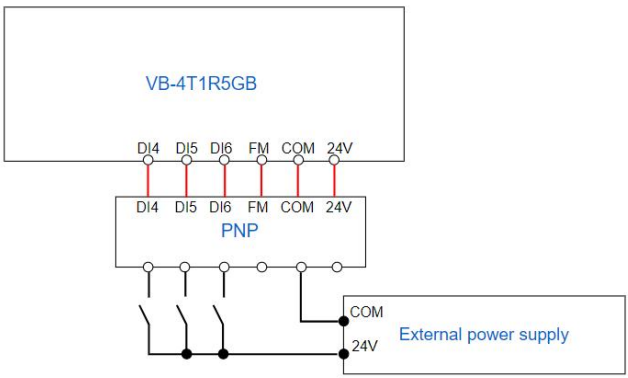

Additional Notes：

This expansion card has no specified requirements on the software or hardware of the inverter.
After using this expansion board, only three input terminals DI4, DI5 and DI6 are compatible with PNP signal, other control terminals are not affected.

Chapter 3 Display and operation

3. 1 Keypad

You can modify the parameters, monitor the working status and start or stop the AC Drive by operating the keypad, as shown in the following figure.

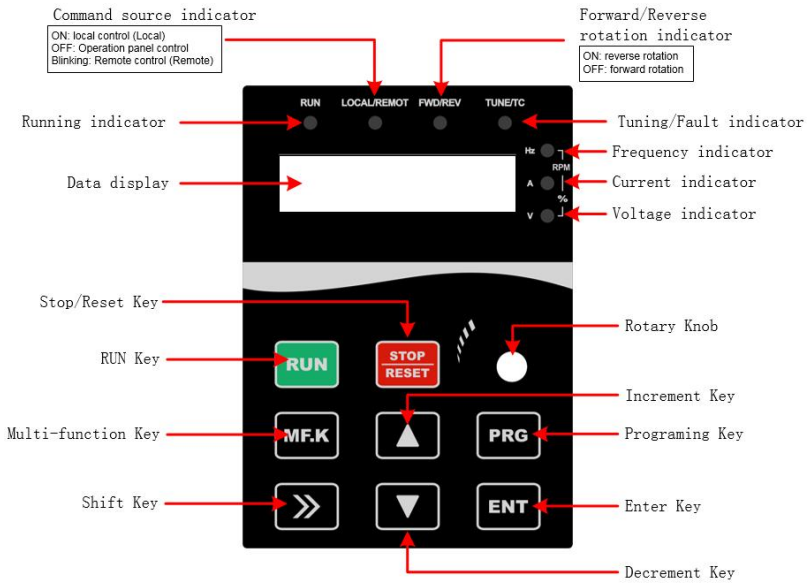

Figure 3-1-1 Keypad diagram

3.2 Description of indicators and keys

Item	Name	Function
Indicator	Unit indicators	◆ Hz: Unit of frequency; ◆ A:Unit of current; ◆ V:Unit of voltage; ◆ RPM（Hz+A）: Unit of rotational speed; ◆ %（A+V）: Percentage
	Status	◆ RUN: ON/Running; OFF/Stop ◆ FWD/REV: ON/Forward rotation; OFF/Reverse rotation; Blinking/Forward and reverse switching ◆ TUNE/TC: Blinking slowly/Auto-tuning state; Blinking quickly/Fault state; ◆ LOCAL/REMOTE: ON/Terminal control; Blinking/Communication; OFF/keypad control
Key	PRG (Programming)	Enter or exit the first menu.
	ENT (Confirm)	Enter the menu interfaces and confirm the parameter setting.
	△（Increment）	Increase date or function code.
	▽（Decrement）	Decrease data or function code.
	>>（Shift）	Select the displayed parameters in the stop or running state and select the digit to be modified when modifying parameters.
	RUN	Start the AC Drive in keypad control mode.
	STOP/RESET	Stop the AC Drive when it is in the running state and perform the reset operation when it is in the fault state. The functions of this key are restricted in F7.02.
	MF.K (Multi-functional choice)	Perform function switchover according to the setting of F7.01.
Knob	Pulse potentiometer	Can be used as frequency source.When used as a frequency source, clockwise rotation increases the frequency and counterclockwise rotation decreases the frequency.

Table 3-2-1 Description of Indicators and key

Chapter 4 Parameter function

"○": the parameter can be modified in both standby and operating state;

"●": the parameter can't be modified in operating state;

"◎":the parameter is the actual detected and recorded value which can't be modified;

Note: the communication address is hexadecimal.

4.1 Functional parameter

Function Code	Parameter Name	Setting Range	Default	Property	Modbus Address
F0 Group: basic function					
F0.00	Motor control mode	0:Sensorless vector control（SVC） 1: V/F control	1	●	0000
F0.01	Command source selection	0：Keypad control（LED off） 1：Terminal control（LED on） 2：Communication LED (LED blinking）	0	●	0001
F0.02	UP/DOWN standard	0：Operating frequency 1：Setting frequency	1	●	0002
F0.03	Setting main frequency source X	0：Digital setting (non-retentive at power failure) 1：Digital setting (retentive at power failure) 2：AI1 3：AI2 4：Reserved 5：Reserved 6：Multi-speed instructions 7：Simple PLC 8：PID 9：Communication setting	1	○	0003
F0.04	Setting auxiliary frequency source Y	Same as F0.03(Settings of main frequency source X)	0	○	0004
F0.05	Range of auxiliary requency source Y	0：Relative to the maximum frequency 1：Relative to frequency sourceX	0	○	0005
F0.06	Percentage range of auxiliary requency source Y	0% ～ 150%	100%	○	0006
F0.07	Frequency reference selection	Single-digit: Selection of frequency source selection	0	○	0007

Function Code	Parameter Name	Setting Range	Default	Property	Modbus Address
		0: main frequency source X 1. main and auxiliary operation results 2:Switchover between X and Y 3:Switchover between X and main (X) & auxiliary(Y) operation 4:Switchover between Y and main (X) & auxiliary(Y) operation Ten's digit: X and Y operation relationship 0: X+Y 1: X -Y 2: Maximum 3: Minimum 4: X*Y			
F0.08	Keypad setting frequency	0.00Hz ～F0.10	50.00Hz	○	0008
F0.09	Running direction selection	0: Same direction 1: Reveres direction	0	○	0009
F0.10	Maximum frequency	50.00Hz ～ 320.00Hz	50.00Hz	●	000A
F0.11	Source of frequency upper limit	0: Set by F0.12 1: AI1 2: AI2 3: Reserved 4: Reserved 5: Communication setting	0	●	000B
F0.12	Frequency upper limit	Frequency lower limit (F0.14)～F0.10	50.00Hz	○	000C
F0.13	Upper limit frequency offset	0.00Hz ～F0.10	0.00Hz	○	000D
F0.14	Frequency lower limit	0.00Hz ～F0.12	0.00Hz	○	000E
F0.15	The function of frequency lower limit	0: Running at frequency lower limit 1: Stop 2: Standby	0	○	000F
F0.16	Carrier frequency	0.5kHz ～ 16.0kHz	Model dependent	○	0010
F0.17	Reserved	-	-	-	0011
F0.18	Acceleration time 1	0.0s ～ 6500.0s	Model dependent	○	0012
F0.19	Deceleration time 1	0.0s ～ 6500.0s	Model dependent	○	0013
F0.20	Default setting restoring	0: No operation	0	●	0014

Function Code	Parameter Name	Setting Range	Default	Property	Modbus Address
		1：Restore to factory default setting (not including F2 parameters) 2：clear fault record			
F0.21	Function code modification attribute	0：modifiable 1：non-modifiable	0	○	0015
F0.22	Retentive of digital setting frequency	0：No retentive 1：retentive	1	●	0016
F0.23	Acceleration & deceleration time unit	0：1 s 1：0.1 s 2：0.01 s	1	●	0017
F0.24	Acceleration & deceleration time of base frequency	0：Maximum frequency（F0.10） 1：Setting frequency 2：100Hz	0	●	0018
F0.25	Fan operating mode	0：Automatic running 1：Keep running when power on	0	○	0019
F0.26	Frequency instruction decimal point	1：1 decimal point 2：2 decimal point	2	●	001A
F0.27	Multi-speed priority	0：invalid 1：valid	1	○	001B
F1 Group: start and stop					
F1.00	Starting mode	0：Start directly 1：Speed tracing and start 2：Pre-excitation start	0	○	0100
F1.01	Speed tracking mode	0：Start with the frequency of input power failure 1：Start at zero speed 2：Start at the maximum frequency 3：Excitation search	0	●	0101
F1.02	Speed tracking coefficient	1 ～ 100	20	○	0102
F1.03	Starting frequency	0.00Hz ～ 10.00Hz	0.00Hz	○	0103
F1.04	Hold time of starting frequency	0.0s ～ 100.0s	0.0s	●	0104
F1.05	DC braking current at start-up/Pre-excitation current	0% ～ 100%	0%	●	0105
F1.06	DC braking current at start-up/Pre-excitation time	0.0s ～ 100.0s	0.0s	●	0106
F1.07	Acceleration &	0：Linear acceleration/deceleration	0	●	0107

Function Code	Parameter Name	Setting Range	Default	Property	Modbus Address
	deceleration method	1：S-curve acceleration/deceleration A 2：S-curve acceleration/deceleration B			
F1.08	Time proportion of S-curve start segment	0.0% ～ (100.0%-F1.09)	30.00%	●	0108
F1.09	Time proportion of S-curve end segment	0.0% ～(100.0%-F1.08)	30.00%	●	0109
F1.10	Stop mode	0：Decelerate to stop 1：Free stopping	0	○	010A
F1.11	Trigging frequency of DC braking at stop	0.00Hz ～F0.10	0.00Hz	○	010B
F1.12	Waiting time of DC braking at stop	0.0s ～ 100.0s	0.0s	○	010C
F1.13	The current of DC braking at stop	0% ～ 100%	0%	○	010D
F1.14	The time of DC braking at stop	0.0s ～ 100.0s	0.0s	○	010E
F1.15	Brake use rate	0% ～ 100%	100%	○	010F
F1.16	Zero frequency output selection	0：Open 1：Closed	1	●	0110
F2 Group: motor parameters					
F2.00	Motor type selection	0：Ordinary asynchronous motor 1：Variable frequency asynchronous motor	0	●	0200
F2.01	Motor rated power	0.1kW ～ 400.0kW	Model dependent	●	0201
F2.02	Motor rated voltage	1V ～ 440V	Model dependent	●	0202
F2.03	Motor rated current	0.01A ～ 655.35A（<=55kW） 0.1A ～ 6553.5A（>55kW）	Model dependent	●	0203
F2.04	Motor rated frequency	0.01Hz ～ F0.10	Model dependent	●	0204
F2.05	Motor rated rotation speed	1rpm ～ 36000rpm	Model dependent	●	0205
F2.06	Asynchronous motor stator resistance	0.001Ω ～ 65.535Ω （<=55kW） 0.0001Ω ～ 6.5535Ω（>55kW）	Model dependent	●	0206

Function Code	Parameter Name	Setting Range	Default	Property	Modbus Address
F2.07	Asynchronous motor rotator resistance	0.001Ω ～ 65.535Ω （<=55kW） 0.0001Ω ～ 6.5535Ω（>55kW）	Model dependent	●	0207
F2.08	Asynchronous motor leakage inductance	0.01Mh ～ 655.35Mh （<=55kW） 0.001Mh ～ 65.535Mh （>55kW）	Model dependent	●	0208
F2.09	Asynchronous motor mutual inductance	0.1Mh ～ 6553.5Mh （<=55kW） 0.01Mh ～ 655.35Mh （>55kW）	Model dependent	●	0209
F2.10	Asynchronous motor no-load current	0.01A ～ F2.03 （<=55kW） 0.1A ～ F2.03 （>55kW）	Model dependent	●	020A
F2.11	Tuning selection	0：No operation 1：The asynchronous machine statictuning. 2：The asynchronous machine is fully tuned	0	●	020B
F2.12	G/P type selection	1：General model (G) (constant torque load model) 2：Pump model (P) (draught fan, water pump type load model)	Model dependent	●	020C
F3 Group: vector parameters					
F3.00	Speed loop proportional gain 1	1 ～ 100	30	○	0300
F3.01	Speed loop integral time 1	0.01s ～ 10.00s	0.50s	○	0301
F3.02	Switchover frequency 1	0.00 ～ F3.05	5.00Hz	○	0302
F3.03	Speed loop proportional gain 2	1 ～ 100	20	○	0303
F3.04	Speed loop integral time 2	0.01s ～ 10.00s	1.00s	○	0304
F3.05	Switchover frequency 2	F3.02 ～ F0.10	10.00Hz	○	0305
F3.06	Slip compensation coefficient of vector control	50% ～ 200%	100%	○	0306
F3.07	Speed loop filter time constant.	0.000s ～ 0.100s	0.000s	○	0307
F3.08	Speed control torque upper limit	0.0% ～ 200.0%	150.00%	○	0308
F3.09	Speed/torque control	0: Speed control 1. Torque control	0	●	0309
F3.10	Torque upper limit source in torque control	0: Digital setting 1: AI1	0	●	030A

Function Code	Parameter Name	Setting Range	Default	Property	Modbus Address
		2: AI2 3: Reserved 4: Reserved 5: Communication setting 6: MIN(AI1,AI2) 7: MAX(AI1,AI2)			
F3.11	Digital setting of torque upper limit in torque control	-200.0% ～ 200.0%	150.00%	○	030B
F3.12	Forward maximum frequency of torque control	0.00Hz ～F0.10	50.00Hz	○	030C
F3.13	Reverse maximum frequency of torque control	0.00Hz ～F0.10	50.00Hz	○	030D
F3.14	Acceleration time of torque control	0.00s ～ 650.00s	0.00s	○	030E
F3.15	Deceleration time of torque control	0.00s ～ 650.00s	0.00s	○	030F
F3.16	Torque stiffness coefficient	10.0%~120.0%	100.00%	●	0310
F3.17	M axis current loop proportional gain	0 ～ 60000	2000	○	0311
F3.18	M axis current loop integral gain.	0 ～ 60000	1300	○	0312
F3.19	T axis current proportional gain	0 ～ 60000	2000	○	0313
F3.20	T axis current integral gain	0 ～ 60000	1300	○	0314
F3.21	The speed loop integral separation	0: Invalid 1: Valid	0	○	0315
F3.22	Reserved	-	-	-	0316
F3.23	Reserved	-	-	-	0317
F3.24	Torque mode friction compensation coefficient	100 ～ 300	100	●	0318
F3.25	Torque mode friction compensation time	0 ～ 100.0s	0	●	0319
F4 Group: control parameters					
F4.00	V/F curve setting	0: Linear V/F 1: Multi-point V/F 2: Square V/F	0	●	0400

Function Code	Parameter Name	Setting Range	Default	Property	Modbus Address
		3~9: Reserved 10: V/F complete separation 11: V/F half separation			
F4.01	Torque boost	0.0%（fixed torque boost） 0.1% ～ 30.0%	Model dependent	○	0401
F4.02	Cut-off frequency of torque boost	0.00Hz ～F0.10	50.00Hz	●	0402
F4.03	Multipoint V/F frequency 1	0.00Hz ～ F4.05	0.00Hz	●	0403
F4.04	Multipoint V/F voltage 1	0.0% ～ 100.0%	0.00%	●	0404
F4.05	Multipoint V/F frequency 2	F4.03 ～ F4.07	0.00Hz	●	0405
F4.06	Multipoint V/F voltage 2	0.0% ～ 100.0%	0.00%	●	0406
F4.07	Multipoint V/F frequency 3	F4.05 ～ F2.04	0.00Hz	●	0407
F4.08	Multipoint V/F voltage 3	0.0% ～ 100.0%	0.00%	●	0408
F4.09	V/F slip compensation	0.0% ～ 200.0%	0.00%	○	0409
F4.10	V/F over-excitation gain	0 ～ 200	0	○	040A
F4.11	V/F oscillation suppression gain	0 ～ 100	Model dependent	○	040B
F4.12	Voltage source for V/F separation	0: Digital（F4.13） 1: AI1 2: AI2 3: Reserved 4: Reserved 5: Multi-speed instructions 6: Simple PLC 7: PID 8: Communication setting (100% corresponds to the rated motor voltage)	0	○	040C
F4.13	Voltage digital setting for V/F separation	0V ～F2.02	0V	○	040D
F4.14	Voltage rise time of separation	0.0s ～ 1000.0s (It indicates the time for the voltage rising from 0 to rated motor voltage.)	0.0s	○	040E
F4.15	Reserved	-	-	-	040F
F4.16	Auto voltage regulation (AVR)	0：Disable 1：Deceleration only enable 2：Constant speed only enable	1	●	0410

Function Code	Parameter Name	Setting Range	Default	Property	Modbus Address
		3：Enable			
F5 Group: input terminal					
F5.00	DI1 terminal function selection	0: No function 1: Forward running (FWD) 2: Reverse running (REV) 3: Three-wire operation control 4: Forward point movement (FJOG) 5: Reverse point movement (RJOG) 6: Terminal UP 7: Terminal DOWN 8: Free stopping 9: Reset 10: Run pause 11: External faults often open input 12: Multi-speed instruction terminal 1 13: Multi-speed instruction terminal 2 14: Multi-speed instruction terminal 3 15: Multi-speed instruction terminal 4 16: Terminal 1 for acceleration/deceleration time selection 17: Terminal 2 for acceleration/deceleration time selection 18: Frequency source switchover（terminal and keypad） 19: UP/DOWN setting clear 20: Command source switchover terminal 1 21: Acceleration/deceleration prohibited 22: PID pause 23: PLC status reset 24: Swing pause 25: Counter input 26: Counter reset 27: Length count input 28: Length reset 29: Torque control prohibited 30: Pulse input (only valid for DI6) 31: Reserved 32: Immediate dc braking 33: External faults often closed input 34:frequency setting effect terminal (this terminal function is not set, the default is valid) 35: Reverse PID action direction 36: External stop terminal 1 37: Command source switchover terminal 1 38: PID integral pause 39: Frequency source X and preset frequency switchover terminals 40: Frequency source Y and preset frequency switchover terminals 41 ～ 42: Reserved	1	●	0500
F5.01	DI2 terminal function selection		4	●	0501
F5.02	DI3 terminal function selection		9	●	0502
F5.03	DI4 terminal function selection		12	●	0503
F5.04	DI5 terminal function selection		13	●	0504
F5.05	DI6 terminal function selection		0	●	0505
F5.06 –F5.09	Reserved		-	-	-
F5.10	VDI terminal function selection		0	●	050A
F5.11~ F5.14	Reserved		-	-	-

Function Code	Parameter Name	Setting Range	Default	Property	Modbus Address
		43: PID parameter switchover terminal 44: User-defined fault 1 45: User-defined fault 2 46: Speed control/torque control switchover 47: Emergency stop 48: External stopping terminal 22 49: Deceleration dc braking 50: Clear the current running time 51: Timing enable 52: Timed reset 53～59: Reserved			
F5.15	DI filter time	0.000s ～ 1.000s	0.010s	○	050F
F5.16	Terminal command mode	0: Two-line mode 1 1: Two-line mode 2 2: Three-line mode 1 3: Three-line mode 2	0	●	0510
F5.17	UP/DOWN change rate range	0.01Hz ～ 6553.5Hz	0.50Hz	○	0511
F5.18	AI1 minimum input	-10.00V ～ F5.20	0.00V	○	0512
F5.19	Percentage rate of AI1 minimum input	-100.0% ～ +100.0%	0.00%	○	0513
F5.20	AI1 maximum input	F5.18～ +10.00V	10.00V	○	0514
F5.21	Percentage rate of AI1 maximum input	-100.0% ～ +100.0%	100.00%	○	0515
F5.22	AI1 filter time	0.00s ～ 10.00s	0.10s	○	0516
F5.23	AI2 minimum input	-10.00V ～ F5.25	0.00V	○	0517
F5.24	Percentage rate of AI2 minimum input	-100.0% ～ +100.0%	0.00%	○	0518
F5.25	AI2 maximum input	F5.23 ～ +10.00V	10.00V	○	0519
F5.26	Percentage rate of AI2 maximum input	-100.0% ～ +100.0%	100.00%	○	051A
F5.27	AI2 filter time	0.00s ～ 10.00s	0.10s	○	051B
F5.28	Reserved	-	-	○	051C
F5.29	Reserved	-	-	○	051D
F5.30	Reserved	-	-	○	051E
F5.31	Reserved	-	-	○	051F
F5.32	Reserved	-	-	○	0520
F5.33	DI1 enable delay time	0.0s ～ 3600.0s	0.0s	○	0521

Function Code	Parameter Name	Setting Range	Default	Property	Modbus Address
F5.34	DI2 enable delay time	0.0s ～ 3600.0s	0.0s	○	0522
F5.35	DI1 disabled delay time	0.0s ～ 3600.0s	0.0s	○	0523
F5.36	DI2 disabled delay time	0.0s ～ 3600.0s	0.0s	○	0524
F5.37	DI valid mode selection 1	0: High level 1: Low level Single digit: DI1 Ten's digit: DI2 Hundred's digit: DI3 Thousand's digit: DI4 Ten Thousand's digit: DI5	0	●	0525
F5.38	DI valid mode selection 2	0: High level 1: Low level Single digit: DI6 Ten's digit: Reserved Hundred's digit: Reserved Thousand's digit: Reserved Ten Thousand's digit: Reserved	0	●	0526
F5.39	AI1 zero drift coefficient	0～50.00	0	○	0527
F5.40	AI2 zero drift coefficient	0～50.00	0	○	0528
F6 Group: output terminal					
F6.00	FM terminal out mode	0: Reserved 1: Open-collector output (FMR)	1	○	0600
F6.01	FMR function	0: No output 1: AC Drive operation 2: Fault out(stop) 3: Frequency level detection FDT1 output 4: Frequency reached 5: Zero-speed running(no output at stop) 6: Motor overload pre-warning 7: AC Drive overload pre-warning 8: Set count value reached 9: Designated count value reached 10: Length reached 11: PLC cycle complete 12: Accumulative running time reached 13: Frequency limited 14: Torque limited 15: Ready for running 16: AI1 larger than AI2 17: Frequency upper limit reached 18: Frequency lower limit reached 19: Undervoltage state output 20: Communication setting 21: Positioning completed (Reserved) 22: Positioning close (Reserved) 23: Zero-speed running 2（having output at	0	○	0601
F6.02	Relay 1 function		2	○	0602
F6.03	Relay 2 function		1	○	0603
F6.04 ~F6.05	Reserved		-	-	-
F6.06	VDO output selection		0	●	0606
F6.07~ F6.10	Reserved		-	-	-

Function Code	Parameter Name	Setting Range	Default	Property	Modbus Address
		stop） 24: Accumulative power-on time reached 25: Frequency level detection FDT2 26: Frequency 1 reached 27: Frequency 2 reached 28: Current 1 reached 29: Current 2 reached 30: Timing reached 31: AI1 input limit exceeded 32: Offload 33: Running direction 34: Zero current detection 35: Module temperature reached 36: Software overcurrent output 37: Lower limit frequency reached (non-operational) 38: Fault output (continue operation) 39: Reserved 40: This running time arrive 41: User-defined output 1 42: User-defined output 2 43: Timer output			
F6.11	Reserved	0: Running frequency 1: Set frequency 2: Output current 3: Output torque 4: Output power 5: Output voltage 6: Reserved 7: AI1 8: AI2 9: Reserved 10: Length 11: Count vaule 12: Communication setting 13: Motor rotational speed 14: Output current (0-1000A corresponding to 0-10V) 15: Output voltage (0-1000V corresponding to 0-10V) 16: DC bus voltage (0-1000V corresponding to 0-10V)	0	○	060B
F6.12	AO1 function		0	○	060C
F6.13	AO2 function		1	○	060D
F6.14	Reserved	-	-	○	060E
F6.15	AO1 offset coefficient	-100.0% ～ 100.0%	0.00%	○	060F
F6.16	AO1 gain	-10.00 ～ 10.00	1	○	0610
F6.17	AO2 offset coefficient	-100.0% ～ 100.0%	0.00%	○	0611
F6.18	AO2 gain	-10.00 ～ 10.00	1	○	0612

Function Code	Parameter Name	Setting Range	Default	Property	Modbus Address
F6.19	FMR connectting delay time	0.0s ～ 3600.0s	0.0s	○	0613
F6.20	Relay 1 connectting delay time	0.0s ～ 3600.0s	0.0s	○	0614
F6.21	Relay 2 connectting delay time	0.0s ～ 3600.0s	0.0s	○	0615
F6.22	VDO connectting delay time	0.0s ～ 3600.0s	0.0s	○	0616
F6.23	FMR disconnecting delay	0.0s ～ 3600.0s	0.0s	○	0617
F6.24	Relay 1 disconnecting delay time.	0.0s ～ 3600.0s	0.0s	○	0618
F6.25	Relay 2 disconnecting delay time	0.0s ～ 3600.0s	0.0s	○	0619
F6.26	VDO disconnecting delay time	0.0s ～ 3600.0s	0.0s	○	061A
F6.27	Output terminal valid state selection	0: Positive logic 1: Negative logic Single digit: FDOR Ten's digit: RELAY1 Hundred's digit: RELAY2 Thousand's digit: Reserved Ten thousand's digit: Reserved	0	○	061B
F6.28	User defined output variability selection (EX)1	0: Running frequency 1: Setting frequency 2: DC bus voltage 3: Output voltage 4: Output current 5: Output power 6: Output torque 7 ～ 8: Reserved 9: AI1 input 10: AI2 input 11: Reserved 12: Count value 13: Length value	0	○	061C
F6.29	User defined comparison method 1	Single digit：comparison test method 0: Equal (EX==X1) 1: Equal or greater than 2: Equal or less than 3 Interval comparison (X1≤EX≤X2) 4:Units digit test (EX&X1=X2) Ten's digit: output method 0: False value output 1: Real value output	0	○	061D
F6.30	User defined output dead	0 ～ 65535	0	○	061E

Function Code	Parameter Name	Setting Range	Default	Property	Modbus Address
	zone 1				
F6.31	User-defined 1 output comparison value 1	0 ～ 65535	0	○	061F
F6.32	User-defined 1 output comparison value 2	0 ～ 65535	0	○	0620
F6.33	User defined output variability selection(EX)2	0: Running frequency 1: Setting frequency 2: DC bus voltage 3: Out voltage 4: Out current 5: Out power 6: Out torque 7 ～ 8: Reserved 9: AI1 Input 10: AI2 Input 11: Reserved 12: Count value 13: Length value	0	○	0621
F6.34	User defined comparison method 1	Single digit：comparison test method 0: Equal (EX==X1) 1: Equal or greater than 2: Equal or less than 3 Interval comparison (X1≤EX≤X2) 4:Units digit test (EX&X1=X2) Ten's digit: output method 0: False value output 1: Real value output	0	○	0622
F6.35	User defined output dead zone 2	0 ～ 65535	0	○	0623
F6.36	User-defined 2 output comparison value 1	0 ～ 65535	0	○	0624
F6.37	User-defined 2 output comparison value 2	0 ～ 65535	0	○	0625
F6.38	The setting time of timer	0.00s～100.00s	0	○	0626
F7 Group: keypad and display					
F7.00	LCD keypad parameter copy	0: No operation 1: The native function parameters are uploaded to the LCD keypad 2: LCD keypad function parameters are downloaded to the machine	0	○	0700
F7.01	MF.K key function selection	0: MF.K disabled 1: Switchover between keypad control and remote command control(terminal or	0	●	0701

Function Code	Parameter Name	Setting Range	Default	Property	Modbus Address
		communication) 2: Switchover between forward rotation and reverse rotation 3: Forward JOG 4: Reverse JOG 5: Menu mode switching			
F7.02	STOP/RESET key function	0: STOP/RESET key enable only in keypad control 1: STOP/RESET key enable in any operation mode	1	○	0702
F7.03	LED display running parameters 1	0000 ～ FFFF Bit00: Running frequency (Hz) Bit01: Setting frequency (Hz) Bit02: DC bus voltage (V) Bit03: Output voltage (V) Bit04: Output current (A) Bit05: Output power (kW) Bit06: Output torque (%) Bit07: DI input status Bit08: DO output status Bit09: AI1 power (V) Bit10: AI2 power (V) Bit11: Reserved Bit12: Count value Bit13: Length value Bit14: Load speed display Bit15: PID setting	17	○	0703
F7.04	LED display running parameters 2	0000 ～ FFFF Bit00: PID feedback Bit01: PLC stage Bit02: Feedback speed (0.1Hz) Bit03: Reserved Bit04: Remaining running time Bit05: AI1 voltage before correction Bit06: AI2 voltage before correction Bit07: Reserved Bit08: Linear speed Bit09: Current power-on time Bit10: Current running time Bit11: Reserved Bit12: Communication setting Bit13: Reserved Bit14: Main frequency X diaplay Bit15: Auxiliary frequency Y display	0	○	0704
F7.05	LED display stop parameters	0000 ～ FFFF Bit00: Setting frequency (Hz) Bit01: DC bus voltage(V) Bit02: DI input status Bit03: DO output status	33	○	0705

Function Code	Parameter Name	Setting Range	Default	Property	Modbus Address
		Bit04: AI1 voltage (V) Bit05: AI2 voltage (V) Bit06: Reserved Bit07: Count value Bit08: Length value Bit09: PLC stage Bit10: Load speed display Bit11: PID setting Bit12: Reserved Bit13: PID feedback value			
F7.06	Load speed display coefficient	0.0001 ～ 6.5000	0.3	○	0706
F7.07	Heatsink temperature of IGBT	0℃～ 100℃	.	◎	0707
F7.08	Heatsink temperature of rectifier bridge	0℃～ 100℃	.	◎	0708
F7.09	Accumulative running time	0h ～ 65535h	.	◎	0709
F7.10	Product number	-	.	◎	070A
F7.11	Software version	-	.	◎	070B
F7.12	Number of decimal places for load speed display	0: 0 decimal places 1: 1 decimal places 2: 2 decimal places 3: 3 decimal places	0	○	070C
F7.13	Accumulative power-on time	0h ～ 65535h	.	◎	070D
F7.14	Accumulative power consumption	0 kWh～ 65535 kWh	.	◎	070E
F7.15	Performance software version	-		◎	070F
F8 Group: auxiliary functions					
F8.00	JOG running frequency	0.00Hz ～F0.10	2.00Hz	○	0800
F8.01	JOG acceleration time	0.0s ～ 6500.0s	20.0s	○	0801
F8.02	JOG deceleration time	0.0s ～ 6500.0s	20.0s	○	0802
F8.03	Acceleration time 2	0.0s ～ 6500.0s	Model dependent	○	0803
F8.04	Deceleration time 2	0.0s ～ 6500.0s	Model dependent	○	0804
F8.05	Acceleration time 3	0.0s ～ 6500.0s	Model depende	○	0805

Function Code	Parameter Name	Setting Range	Default	Property	Modbus Address
			nt		
F8.06	Deceleration time 3	0.0s ～ 6500.0s	Model dependent	○	0806
F8.07	Acceleration time 4	0.0s ～ 6500.0s	Model dependent	○	0807
F8.08	Deceleration time 4	0.0s ～ 6500.0s	Model dependent	○	0808
F8.09	Jump frequency 1	0.00Hz ～F0.10	0.00Hz	○	0809
F8.10	Jump frequency 2	0.00Hz ～F0.10	0.00Hz	○	080A
F8.11	Frequency jump amplitude	0.00Hz ～F0.10	0.01Hz	○	080B
F8.12	Forward/Reverse rotation dead-zone time	0.0s ～ 3000.0s	0.0s	○	080C
F8.13	Reverse control	0: Enabled 1: Disabled	0	○	080D
F8.14	The carrier frequency is adjusted with temperature	0: No 1: Yes	1	○	080E
F8.15	Droop control	0.00Hz ～ 10.00Hz	0.00Hz	○	080F
F8.16	Setting of accumulated power-on arrive time	0h ～ 65000h	0h	○	0810
F8.17	Setting of accumulated running arrive time	0h ～ 65000h	65000h	○	0811
F8.18	Startup protection	0: No 1: Protection	0	○	0812
F8.19	Frequency detection value (FDT1)	0.00Hz ～F0.10	50.00Hz	○	0813
F8.20	Frequency detection hysteresis (FDT1)	0.0% ～ 100.0%（FDT1 level）	5.0%	○	0814
F8.21	Detection range of frequency reached	0.0% ～ 100.0%（maximum frequency）	0.00%	○	0815
F8.22	Jump frequency during acceleration/deceleration	0: Disabled 1: Enabled	0	○	0816
F8.23	Accumulated running time arrive selection	0:Keep running 1:Fault warning	0	●	0817
F8.24	Accumulated power-on time arrive action selection	0:Keep running 1:Fault warning	0	●	0818

Function Code	Parameter Name	Setting Range	Default	Property	Modbus Address
F8.25	Acceleration time 1/2 switching frequency point	0.00Hz ～F0.10	0.00Hz	○	0819
F8.26	Deceleration time 1/2 switch frequency point.	0.00Hz ～F0.10	0.00Hz	○	081A
F8.27	Terminal JOG preferred	0: Disabled 1: Enabled	1	○	081B
F8.28	Frequency detection value (FDT2)	0.00Hz ～F0.10	50.00Hz	○	081C
F8.29	Frequency detection hysteresis (FDT2)	0.0% ～ 100.0%（FDT2 level）	5.00%	○	081D
F8.30	Any frequency reaching detection value 1	0.00Hz ～F0.10	50.00Hz	○	081E
F8.31	Any frequency reaching detection amplitude 1	0.0% ～ 100.0%（maximum frequency）	0.00%	○	081F
F8.32	Any frequency reaching detection value 2	0.00Hz ～F0.10	50.00Hz	○	0820
F8.33	Any frequency reaching detection amplitude 2	0.0% ～ 100.0%（maximum frequency）	0.00%	○	0821
F8.34	Zero current detection level	0.0% ～ 300.0% (motor rated current)	5.00%	○	0822
F8.35	Zero current detection delay time	0.01s ～ 600.00s	0.10s	○	0823
F8.36	Software overcurrent point	0.0%（no detection） 0.1% ～ 300.0%(motor rated current）	200.00%	○	0824
F8.37	Software overcurrent detection delay time	0.00s ～ 600.00s	0.00s	○	0825
F8.38	Any current reaching 1	0.0% ～ 300.0%(motor rated current)	100.00%	○	0826
F8.39	Any current reaching 1 amplitude	0.0% ～ 300.0%(motor rated current)	0.00%	○	0827
F8.40	Any current reaching 2	0.0% ～ 300.0%(motor rated current)	100.00%	○	0828
F8.41	Any current reaching 2amplitude	0.0% ～ 300.0%(motor rated current)	0.00%	○	0829
F8.42	Timing function	0: Disabled 1: Enabled	0	●	082A
F8.43	Timing duration source	0: F8.44 1: AI1 2: AI2 3: Reserved	0	●	082B
F8.44	Timing duration	0.0Min ～ 6500.0Min	0.0Min	●	082C
F8.45	AI1 input voltage lower	0.00V ～ F8.46	3.10V	○	082D

Function Code	Parameter Name	Setting Range	Default	Property	Modbus Address
	limit				
F8.46	AI1 input voltage upper limit	F8.45 ～ 10.00V	6.80V	○	082E
F8.47	IGBT temperature threshold	0℃～ 100℃	75℃	○	082F
F8.48	Fast current limiting	Single-digit: 0: Disabled 1: Enabled Ten's digit: 0: Disable Err40 Display 1: Enabled Err40 Display	11	○	0830
F8.49	Random carrier mode	0: Closed 1: Random carrier mode 1 2: Random carrier mode 2 3: Random carrier mode 3 4: Random carrier mode 4 5: Random carrier mode 5 6～10: Reserved	0	○	0831
F9 Group: process control PID function					
F9.00	PID setting source	0: F9.01 1: AI1 2: AI2 3: Reserved 4: Reserved 5: Communication setting 6: Multi-speed instructions	0	○	0900
F9.01	PID digital setting	0.0% ～ 100.0%	50.0%	○	0901
F9.02	PID feedback source	0: AI1 1: AI2 2: Reserved 3: AI1-AI2 4: Reserved 5: Communication setting 6: AI1+AI2 7: MAX(|AI1|, |AI2|) 8: MIN(|AI1|, |AI2|)	0	○	0902
F9.03	PID controlling direction	0: Positive 1: Negative	0	○	0903
F9.04	PID setting feedback range	0 ～ 65535	1000	○	0904
F9.05	Proportional gain P1	0.0 ～ 1000.0	20	○	0905
F9.06	Integral time I1	0.00s ～ 10.00s	2.00s	○	0906
F9.07	Differential time D1	0.000s ～ 10.000s	0.000s	○	0907

Function Code	Parameter Name	Setting Range	Default	Property	Modbus Address
F9.08	PID reverse cut-off frequency	0.00 ～F0.10	0.00Hz	○	0908
F9.09	PID deviation limit	0.0% ～ 100.0%	0.0%	○	0909
F9.10	PID differential limit range	0.00% ～ 100.00%	0.10%	○	090A
F9.11	PID setting change time	0.00 ～ 650.00s	0.00s	○	090B
F9.12	PID feedback filtering time	0.00 ～ 60.00s	0.00s	○	090C
F9.13	PID output filtering time	0.00 ～ 60.00s	0.00s	○	090D
F9.14	Proportional gain P2	0.0 ～ 1000.0	20	○	090E
F9.15	Integral time I2	0.00s ～ 10.00s	2.00s	○	090F
F9.16	Differential time D2	0.000s ～ 10.000s	0.000s	○	0910
F9.17	PID parameter switchover condition	0: No switchover 1: DI terminal 2: Automatic switchover based on deviation	0	○	0911
F9.18	PID parameter switchover deviation 1	0.0% ～ F9.19	20.0%	○	0912
F9.19	PID parameter switchover deviation 2	F9.18 ～ 100.0%	80.0%	○	0913
F9.20	PID initial value	0.0% ～ 100.0%	0.0%	○	0914
F9.21	PID initial value holding time	0.00 ～ 650.00s	0.00s	○	0915
F9.22	Two output deviation forward maximum.	0.00% ～ 100.00%	1.00%	○	0916
F9.23	Two output deviation reverse maximum	0.00% ～ 100.00%	1.00%	○	0917
F9.24	PID integral property	Single-digit: Integration separation 0: Disabled 1: Enabled Ten's digit: Output to limit value 0: Continue the integral 1: Stop the integral	0	○	0918
F9.25	Detection value of PID feedback loss	0.0%: No judging feedback loss 0.1% ～ 100.0%	0.0%	○	0919
F9.26	Detection time of PID feedback loss	0.0s ～ 20.0s	0.0s	○	091A
F9.27	PID operation at stop	0: No PID operation at stop 1: PID operation at stop	0	○	091B
F9.28	PID function selection	0: Normal PID 1: Sleep PID	0	○	091C

Function Code	Parameter Name	Setting Range	Default	Property	Modbus Address
F9.29	PID sleep threshold	0.0% ～ 100.0%	60.0%	○	091D
F9.30	PID sleep delay	0.0 ～ 3600.0s	3.0s	○	091E
F9.31	ID wake-up threshold	0.0% ～ 100.0%	20.0%	○	091F
F9.32	PID wake-up time delay	0.0 ～ 3600.0s	3.0s	○	0920
F9.33	PID Minimum output	0: F0.14 1: 0 Hz	0	●	0921
FA Group: fault and protection					
FA.00	Motor overload protection selection	0: Disabled 1: Enabled	1	○	0A00
FA.01	Motor overload protection gain	0.20 ～ 10.00	1	○	0A01
FA.02	Motor overload warning coefficient	50% ～ 100%	80%	○	0A02
FA.03	Overvoltage stall gain	0 ～ 100	10	○	0A03
FA.04	Overvoltage stall protective voltage	120% ～ 150%	130%	○	0A04
FA.05	Overcurrent stall gain	0 ～ 100	Model dependent	○	0A05
FA.06	Overvoltage stall protective current	100% ～ 200%	150%	○	0A06
FA.07	Short-circuit to ground upon power-on	0: Disabled 1: Enabled	1	○	0A07
FA.08	Fault auto reset times	0 ～ 5	0	○	0A08
FA.09	DO action during fault auto reset	0: No act 1: Act	0	○	0A09
FA.10	Time interval of fault auto reset	0.1s ～ 100.0s	1.0s	○	0A0A
FA.11	Input phase loss protection	0: Disabled 1: Enabled	1	○	0A0B
FA.12	Output phase loss protection	0: Disabled 1: Enabled	1	○	0A0C
FA.13	Fault protection action selection 1	0: Free stopping 1: Stop according to the stop mode 2: Continue to run Single-digit: Motor overload (Err11) Ten's digit: Input phase loss (Err12) Hundred's digit: Output phase loss (Err13) Thousand's digit:External equipment fault (Err15)	0	○	0A0D

Function Code	Parameter Name	Setting Range	Default	Property	Modbus Address
		Ten thousand's digit: Communication fault (Err16)			
FA.14	Reserved	-	-	-	0A0E
FA.15	Fault protection action selection 3	0: Free stopping 1: Stop according to the stop mode 2: Continue to run Single-digit: User-defined fault 1 (Err27) Ten's digit: User-defined fault 2 (Err28) Hundred's digit: Reserved Thousand's digit:Drop (Err30) Ten thousand's digit: PID feedback loss at run time (Err31)	0	○	0A0F
FA.16	Reserved	-	-	-	0A10
FA.17	Reserved	-	-	-	0A11
FA.18	Undervoltage setting	60.0% ～ 140.0%	100.00%	○	0A12
FA.19	Overvoltage setting	200.0V ～ 810.0V	810.0V	○	0A13
FA.20	Continuerunning frequency selection during failure	0: Run with the current run frequency 1: Run with the setting frequency 2: Run with the upper limit frequency 3: Run with lower limit frequency. 4: Run with standby frequency when abnormal	0	○	0A14
FA.21	Abnormal standby frequency setting	0.0% ～ 100.0%(Current target frequency)	100.00%	○	0A15
FA.22	Action selection at instantaneous power failure	0: Invalid 1: Slow down 2: Deceleration stop	0	○	0A16
FA.23	Action pause judging voltage at instantaneous power failure	80.0% ～ 100.0%	90.00%	○	0A17
FA.24	Voltage rally judging time at instantaneous power failure	0.00s ～ 100.00s	0.50s	○	0A18
FA.25	Action judging voltage at instantaneous power failure	60.0% ～ 100.0%(standard bus voltage)	80.00%	○	0A19
FA.26	Loss of loads protection options	0: Disabled 1: Enabled	0	○	0A1A
FA.27	Loss of loads detection level	0.0 ～ 100.0%	10.00%	○	0A1B
FA.28	Loss of loads detection time	0.0 ～ 60.0s	1.0s	○	0A1C
FA.29	The decimal point of the	1: 1 decimal point	222	○	0A1D

Function Code	Parameter Name	Setting Range	Default	Property	Modbus Address
	frequency in failure state	2: 2 decimal point Single-digit: The third fault frequency decimal point Ten's digit: The second failure frequency of the decimal point Hundred's digit: The first failure frequency of the decimal point			
FB Group: swing frequency, fixed length and count					
FB.00	Swing frequency setting mode	0: Relative to the central frequency 1: Relative to the maximum frequency	0	○	0B00
FB.01	Swing frequency amplitude	0.0% ～ 100.0%	0.00%	○	0B01
FB.02	Jump frequency amplitude	0.0% ～ 50.0%	0.00%	○	0B02
FB.03	Swing frequency cycle	0.1s ～ 3000.0s	10.0s	○	0B03
FB.04	Triangular wave rising time coefficient	0.1% ～ 100.0%	50.00%	○	0B04
FB.05	Setting length	0m ～ 65535m	1000m	○	0B05
FB.06	Actual length	0m ～ 65535m	0m	○	0B06
FB.07	Number of pulses per meter	0.1 ～ 6553.5	100	○	0B07
FB.08	Set count value	1 ～ 65535	1000	○	0B08
FB.09	Designated count value	1 ～ 65535	1000	○	0B09
FC Group: communication parameters					
FC.00	Local address	1 ～ 247，0 is broadcast address	1	○	0C00
FC.01	Baud rate	0：300 bps 1：600 bps 2：1200 bps 3：2400 bps 4：4800 bps 5：9600 bps 6：19200 bps 7：38400 bps 8：57600 bps 9：115200 bps	5	○	0C01
FC.02	Data format	0: No check, data format <8,N,2> 1: Even parity check, data format <8,E,1> 2: Odd Parity check, data format <8,0,1> 3: No check, data format <8,N,1>	3	○	0C02
FC.03	Response delay	0ms ～ 20ms	2	○	0C03

Function Code	Parameter Name	Setting Range	Default	Property	Modbus Address
FC.04	Communication timeout	0.0（invalid） 0.1s~60.0s	0	○	0C04
FC.05	Communication reading current resolution	0：0.01A 1：0.1A	0	○	0C05
FD Group: multi-speed instructions and simple PLC function					
FD.00	Multistage speed 0	-100.0% ～ 100.0% (F0.10)	0.00%	○	0D00
FD.01	Multistage speed 1	-100.0% ～ 100.0%	0.00%	○	0D01
FD.02	Multistage speed 2	-100.0% ～ 100.0%	0.00%	○	0D02
FD.03	Multistage speed 3	-100.0% ～ 100.0%	0.00%	○	0D03
FD.04	Multistage speed 4	-100.0% ～ 100.0%	0.00%	○	0D04
FD.05	Multistage speed 5	-100.0% ～ 100.0%	0.00%	○	0D05
FD.06	Multistage speed 6	-100.0% ～ 100.0%	0.00%	○	0D06
FD.07	Multistage speed 7	-100.0% ～ 100.0%	0.00%	○	0D07
FD.08	Multistage speed 8	-100.0% ～ 100.0%	0.00%	○	0D08
FD.09	Multistage speed 9	-100.0% ～ 100.0%	0.00%	○	0D09
FD.10	Multistage speed 10	-100.0% ～ 100.0%	0.00%	○	0D0A
FD.11	Multistage speed 11	-100.0% ～ 100.0%	0.00%	○	0D0B
FD.12	Multistage speed 12	-100.0% ～ 100.0%	0.00%	○	0D0C
FD.13	Multistage speed 13	-100.0% ～ 100.0%	0.00%	○	0D0D
FD.14	Multistage speed 14	-100.0% ～ 100.0%	0.00%	○	0D0E
FD.15	Multistage speed 15	-100.0% ～ 100.0%	0.00%	○	0D0F
FD.16	Simple PLC running mode	0:Stop after the AC Drive runs one cycle 1:Keep final values after the AC Drive runs one cycle 2:Repeat after the AC Drive runs one cycle	0	○	0D10
FD.17	Simple PLC retentive selection	Single-digit: (Retentive upon power failure) 0: No 1: Yes Ten's digit: (Retentive upon stop) 0: No 1: Yes	0	○	0D11
FD.18	Running time of simple PLC reference 0	0.0s(h) ～ 6553.5s(h)	0.0s(h)	○	0D12
FD.19	Acceleration/deceleration time of simple PLC reference 0	0 ～ 3	0	○	0D13

Function Code	Parameter Name	Setting Range	Default	Property	Modbus Address
FD.20	Running time of simple PLC reference 1	0.0s(h) ～ 6553.5s(h)	0.0s(h)	○	0D14
FD.21	Acceleration/deceleration time of simple PLC reference 1	0 ～ 3	0	○	0D15
FD.22	Running time of simple PLC reference 2	0.0s(h) ～ 6553.5s(h)	0.0s(h)	○	0D16
FD.23	Acceleration/deceleration time of simple PLC reference 2	0 ～ 3	0	○	0D17
FD.24	Running time of simple PLC reference 3	0.0s(h) ～ 6553.5s(h)	0.0s(h)	○	0D18
FD.25	Acceleration/deceleration time of simple PLC reference 3	0 ～ 3	0	○	0D19
FD.26	Running time of simple PLC reference 4	0.0s(h) ～ 6553.5s(h)	0.0s(h)	○	0D1A
FD.27	Acceleration/deceleration time of simple PLC reference 4	0 ～ 3	0	○	0D1B
FD.28	Running time of simple PLC reference 5	0.0s(h) ～ 6553.5s(h)	0.0s(h)	○	0D1C
FD.29	Acceleration/deceleration time of simple PLC reference 5	0 ～ 3	0	○	0D1D
FD.30	Running time of simple PLC reference 6	0.0s(h) ～ 6553.5s(h)	0.0s(h)	○	0D1E
FD.31	Acceleration/deceleration time of simple PLC reference 6	0 ～ 3	0	○	0D1F
FD.32	Running time of simple PLC reference 7	0.0s(h) ～ 6553.5s(h)	0.0s(h)	○	0D20
FD.33	Acceleration/deceleration time of simple PLC reference 7	0 ～ 3	0	○	0D21
FD.34	Running time of simple PLC reference 8	0.0s(h) ～ 6553.5s(h)	0.0s(h)	○	0D22
FD.35	Acceleration/deceleration time of simple PLC reference 8	0 ～ 3	0	○	0D23
FD.36	Running time of simple PLC reference 9	0.0s(h) ～ 6553.5s(h)	0.0s(h)	○	0D24

Function Code	Parameter Name	Setting Range	Default	Property	Modbus Address
FD.37	Acceleration/deceleration time of simple PLC reference 9	0 ～ 3	0	○	0D25
FD.38	Running time of simple PLC reference 10	0.0s(h) ～ 6553.5s(h)	0.0s(h)	○	0D26
FD.39	Acceleration/deceleration time of simple PLC reference 10	0 ～ 3	0	○	0D27
FD.40	Running time of simple PLC reference 11	0.0s(h) ～ 6553.5s(h)	0.0s(h)	○	0D28
FD.41	Acceleration/deceleration time of simple PLC reference 11	0 ～ 3	0	○	0D29
FD.42	Running time of simple PLC reference 12	0.0s(h) ～ 6553.5s(h)	0.0s(h)	○	0D2A
FD.43	Acceleration/deceleration time of simple PLC reference 12	0 ～ 3	0	○	0D2B
FD.44	Running time of simple PLC reference 13	0.0s(h) ～ 6553.5s(h)	0.0s(h)	○	0D2C
FD.45	Acceleration/deceleration time of simple PLC reference 13	0 ～ 3	0	○	0D2D
FD.46	Running time of simple PLC reference 14	0.0s(h) ～ 6553.5s(h)	0.0s(h)	○	0D2E
FD.47	Acceleration/deceleration time of simple PLC reference 14	0 ～ 3	0	○	0D2F
FD.48	Running time of simple PLC reference 15	0.0s(h) ～ 6553.5s(h)	0.0s(h)	○	0D30
FD.49	Acceleration/deceleration time of simple PLC reference 16	0 ～ 3	0	○	0D31
FD.50	Time unit of simple PLC running	0: S (second) 1: H (hour) 2: Min (minute)	0	○	0D32
FD.51	The source of multistage speed 0	0: Set by FD.00 1: AI1 2: AI2 3: Reserved 4: Reserved 5: PID 6: Set by preset frequency (F0.08)	0	○	0D33

Function Code	Parameter Name	Setting Range	Default	Property	Modbus Address
FE Group: function code management					
FE.00	User password	0 ～ 65535	0	○	0E00
FE.01	Fault record display times	0 ～ 15	5	○	0E01

4.2 Fault Records

Function Code	Parameter Name	Setting Range	Property	Address
E0 Group: the latest failure record				

Function Code	Parameter Name	Setting Range	Property	Address
E0.00	The latest fault type	0: No fault 1: Output short-circuit fault（Err01） 2: Overcurrent during acceleration (Err02) 3: Overcurrent during deceleration (Err03) 4: Overcurrent at constant speed (Err04) 5: Overvoltage during acceleration (Err05) 6: Overvoltage during deceleration (Err06) 7: Overvoltage at constant speed (Err07) 8: Buffer resistance overload (Err08) 9: Undervoltage (Err09) 10: AC Drive overload (Err10) 11: Motor overload (Err11) 12: Input missing phase (Err12) 13: Output missing phase (Err13) 14: Module overheating (Err14) 15: External equipment fault (Err15) 16: Communication fault (Err16) 17: Contactor fault（Err17） 18: Current detection fault(Err18) 19: Motor auto-tuning fault (Err19) 21: Data overflow (Err21) 22: On-power EEPROM check fault (Err22) 23: Short circuit to ground (Err23) 24: Reserved 25: Reserved 26: Running time arrival (Err26) 27: User-defined fault 1 28: User-defined fault 2(Err28) 29: On-power arrival time (Err29) 30: Load drop (Err30) 31: PID feedback loss during running (Err31) 40: With-wave current limit fault (Err40) 41: Reserved	◎	E000
E0.01	Frequency by the latest failure	0.0Hz～F0.10（Maximum frequency）	◎	E001
E0.02	Current by the latest failure	0.00～655.35	◎	E002
E0.03	Bus voltage by the latest failure	0.0～810.0	◎	E003
E0.04	Input terminal state by the latest failure	0～63	◎	E004
E0.05	Output terminal state by the latest failure	0～63	◎	E005
E0.06	The temperature of AC Drive by the latest failure	0～65535	◎	E006
E0.07	The AC Drive state by the latest failure	0～FFFF	◎	E007
E0.08	Time of latest failure (timing from this	0～65535	◎	E008

Function Code	Parameter Name	Setting Range	Property	Address
	on-power time)			
E0.09	Time of the latest failure (timing from the running beginning)	0～6553.5	◎	E009
E0.10	Reserved	—	◎	E010
E0.11	Reserved	—	◎	E011

4.3 Monitoring parameters

Function Code	Parameter Name	Min.Unit	Property	Address
D0 Group: monitoring				
D0.00	Operating frequency (Hz)	0.01Hz	◎	D000
D0.01	Setting frequency (Hz)	0.01Hz	◎	D001
D0.02	Bus voltage (V)	0.1V	◎	D002
D0.03	Output voltage (V)	1V	◎	D003
D0.04	Output current (A)	0.01A	◎	D004
D0.05	Output power (kW)	0.1kW	◎	D005
D0.06	Output torque (%)	0.1%	◎	D006
D0.07	DI input status	1	◎	D007
D0.08	DO output status	1	◎	D008
D0.09	AI1 voltage (V)	0.01V	◎	D009
D0.10	AI2 voltage (V)	0.01V	◎	D00A
D0.11	Reserved	—	◎	D00B
D0.12	Count value	1	◎	D00C
D0.13	Length value	1	◎	D00D
D0.14	Load speed display	1	◎	D00E
D0.15	PID setting	1	◎	D00F
D0.16	PID feedback	1	◎	D010
D0.17	PLC stage	1	◎	D011
D0.18	Reserved	0.01kHz	◎	D012
D0.19	Feedback speed	0.1Hz	◎	D013
D0.20	Remained running time	0.1Min	◎	D014

Function Code	Parameter Name	Min.Unit	Property	Address
D0.21	AI1 voltage before correction	0.001V	◎	D015
D0.22	AI2 voltage before correction	0.001V	◎	D016
D0.23	Reserved	—	◎	D017
D0.24	Linear speed	1m/Min	◎	D018
D0.25	Current power-on time	1Min	◎	D019
D0.26	Current running time	0.1Min	◎	D01A
D0.27	Reserved	—	◎	D01B
D0.28	Communication setting	0.01%	◎	D01C
D0.29	Reserved		◎	D01D
D0.30	Main frequency X diaplay	0.01Hz	◎	D01E
D0.31	Auxiliary frequency Y display	0.01Hz	◎	D01F
D0.32	Viewing any register address value	1	◎	D020
D0.33	Reserved		◎	D021
D0.34	Reserved		◎	D022
D0.35	Target torque	0.1%	◎	D023
D0.36	Reserved		◎	D024
D0.37	Reserved	—	◎	D025
D0.38	Reserved		◎	D026
D0.39	Target voltage upon V/F separation	1V	◎	D027
D0.40	Output voltage upon V/F separation	1V	◎	D028

Chapter 5 Communication protocol

VB Series AC Drive provides RS485 communication interface and supports Modbus communication protocol. Users can achieve centralized control by computer or PLC, set AC Drive operation commands, modify or read function code parameters, read the working state and fault info of the AC Drive.

5.1 Communication control address

Function	Address definition	Data meaning	Read/Write character
Communication set value	1000H	-10000~10000（decimal） ◆ -10000 correspond -100.00% ◆ 10000 correspond 100.00%	Read/Write
Communication control command	2000H	0001: Forward running	Write
		0002: Reverse running	
		0003: JOG forward	
		0004: JOG reverse	
		0005: Free stop	
		0006: Deceleration stop	
		0007: Fault reset	
Digital output terminal	2001H	BIT0~BIT1: Reserved	Write
		BIT2: Relay1 output control	
		BIT3: Relay2 output control	
		BIT4: FMR Output control	
		BIT5:VD0	
		BIT6~BIT9: Reserved	
Analog output AO1 control	2002H	0~7FFF correspond 0%~100%	Write
Analog output AO2 control	2003H	0~7FFF correspond 0%~100%	Write
Pulse output control	2004H	0~7FFF correspond 0%~100%	Write

Table 5-1-1 Communication control address

5.2 Parameter status address

Parameter description	Parameter address	Unit	Read/Write character
Operating frequency	1001H	0.01Hz	Read
Bus voltage	1002H	0.1V	Read
Output voltage	1003H	1V	Read
Output current	1004H	0.01A	Read
Output power	1005H	0.1kW	Read
Output torque	1006H	0.1%	Read
Running speed	1007H	0.01Hz	Read
DI Input sign	1008H	1	Read
DO Output sign	1009H	1	Read
AI1 Voltage	100AH	0.01V	Read
AI2 Voltage	100BH	0.01V	Read
Reserved	100CH	—	Read
Count value input	100DH	1	Read
Length value input	100EH	1	Read
Load speed	100FH	1rpm	Read
PID Setting	1010H	0.10%	Read
PID Feedback	1011H	0.10%	Read
PLC Step	1012H	1（0～15）	Read
Reserved	1013H	—	Read
Reserved	1014H	—	Read
Remained running time	1015H	1min	Read
AI1 voltage before correction	1016H	0.001V	Read
AI2 voltage before correction	1017H	0.001V	Read
Reserved	1018H	—	Read
Linear speed	1019H	1m/min	Read
Current power-on time	101AH	1min	Read

Current running time	101BH	0.1min	Read
Reserved	101CH	—	Read
Communication set value	101DH	1（-10000～10000）	Read
Reserved	101EH	—	Read
Main frequency X display	101FH	0.01Hz	Read
Auxiliary frequency Y display	1020H	0.01Hz	Read

Table 5-2-1 Parameter status address

5.3 AC Drive state and fault description

Parameter description	Parameter address	Data meaning	Read/Write character
The AC Drive state	3000H	0001: Forward running 0002: Reverse running 0003: AC Drive standby 0004: AC Drive failure 0005: AC Drive undervoltage 0006: Forward and reverse switch	Read
The AC Drive fault	8000H	0000: No fault 0001: Output short-circuit fault 0002: Overcurrent during acceleration 0003: Overcurrent during deceleration 0004: Overcurrent at constant speed 0005: Overvoltage during acceleration 0006: Overvoltage during deceleration 0007: Overvoltage at constant speed 0008: Buffer resistance overload 0009: Undervoltage 000A: AC Drive overload 000B: Motor overload 000C: Input missing phase 000D: Output missing phase 000E: Module overheating 000F: External equipment fault 0010: Communication fault 0011: Contactor fault 0012: Current detection fault 0013: Motor auto-tuning fault 0015: Parameter read and write abnormally 0016: On-power EEPROM check fault 0017: Short circuit to ground 001A: Running time arrival 001B: User-defined fault 1 001C: User-defined fault 2 001D: On-power arrival time 001E: Reserved 001F: PID feedback loss during running 0028: With-wave current limit fault (Err40) 0029: Reserved	Read
Communication fault	8001H	0000: No fault 0001: Password error 0002: Command code error 0003:CRC Check error 0004: Invalid address 0005: Invalid parameter 0006: Invalid change parameter 0007: System locked 0008: EEPROM in operation	Read

Table 5-3-1 AC Drive state and fault description

5.4 EEPROM-RAM address exchange description

When communication address in the function code table is the way of writing RAM ways, RAM memory address is the address for power-off but not saving. Under communication way, for writing the command “06H”, if the parameters shall be saved in power-off condition, it could be realized by only changing value in EEPROM. This means you shall change “0”, the highest position in RAM address, into “F”, which is to change into the way of writing EEPROM, also means to change “0XXX” into “FXXX” . Writing life span of EEPROM is generally 1 million times. Frequent changing EEPROM writing will reduce the life span.

Address change example:

Function code	Parameter Name	The RAM Address	The EEPROM Address
F0.10	Maximum frequency	000A	F00A
F0.18	Acceleration time 1	0012	F012

Table 5-4-1 Communication address change rule

Communication address of writing RAM of other parameters shall be in the similar way…

Chapter 6 Troubleshooting & countermeasures

6.1 Faults and solutions

Fault code	Fault type	Reason	Solution
Err01	Output short-circuit fault	1.Short-circuit phenomena exists in AC Drive output	1. Ask for technical service
Err02	Overcurrent during acceleration	1. The output circuit of AC Drive is grounded or short circuited. 2. The acceleration time is too short. 3. The startup operation is performed on the rotating motor. 4. The AC Drive model is of too small power.	1. Eliminate external faults. 2. Increase the acceleration time. 3. Select rotational speed tracking restart or start the motor after it stops. 4. Select the AC Drive of higher power.
Err03	Overcurrent during deceleration	1. The output circuit of AC Drive is grounded or short circuited. 2. The deceleration time is too short.	1. Eliminate external faults. 2. Increase the deceleration time.
Err04	Overcurrent at constant speed	1. The output circuit of AC Drive is grounded or short circuited. 2. The AC Drive model is of too small power.	1. Eliminate external faults. 2. Select the AC Drive of higher power.
Err05	Overvoltage during acceleration	1. Input voltage abnormal. 2. An external force drives the motor during acceleration. 3. The acceleration time is too short. 4. The braking unit and braking resistor are not installed.	1. Turn the input power to the normal range. 2. Cancel the external force. 3. Increase the acceleration time. 4. Installed the braking unit and braking resistor.
Err06	Overvoltage during deceleration	1. Input voltage abnormal. 2. An external force drives the motor during deceleration. 3. The deceleration time is too short. 4. The braking unit and braking resistor are not installed.	1. Turn the input power to the normal range. 2. Cancel the external force. 3. Increase the deceleration time. 4. Installed the braking unit and braking resistor.
Err07	Overvoltage at constant speed	1. Input voltage abnormal. 2. An external force drives the motor during deceleration.	1. Turn the input power to the normal range. 2. Cancel the external force.
Err08	Buffer resistance overload	1. The input voltage is not within the allowable range.	1. Adjust the input voltage to the allowable range.
Err09	Undervoltage	1. Instantaneous power failure occurs on the input supply. 2. The input voltage is not within the normal range. 3. The AC Drive has an	1. Reset the fault. 2. Adjust the input voltage to normal range. 3. Looking for technical service.

Fault code	Fault type	Reason	Solution
		abnormality.	
Err10	AC Drive overload	1. The load is too heavy or lockedrotor occurs on motor. 2. The AC Drive model is of too small power.	1. Reduce the load and check the motor. 2. Select the AC Drive of higher power.
Err11	Motor overload	1. Motor overload protection parameters are not suitable. (FA.01-FA.02). 2. The AC Drive model is of too small power.	1. Set this parameter correctly. 2. Reduce the load and check the motor.
Err12	Input missing phase	1. The input three-phase power is abnormal. 2. The AC Drive has an abnormality.	1. Check input power. 2. Ask for technical service.
Err13	Output missing phase	1. Motor failure. 2. The cable connecting the AC Drive and motor is faulty. 3. The AC Drive's three-phase outputs are unbalanced when the motor is running.	1. Check if the motor is faulty. 2. Eliminate external faults. 3. Check whether the motor three-phase winding is normal.
Err14	Module overheating	1. The ambient temperature is too high. 2. The air filter is blocked. 3. The fan is damaged. 4. The IGBT is damaged.	1. Lower the ambient temperature. 2. Clean the air filter. 3. Replace the fan. 4. Ask for technical service.
Err15	External equipment fault	1. External fault signal is input DI terminal or VDI function.	1. Check the input DI terminal or VDI function.
Err16	Communication fault	1. The PC is in abnormal state. 2. The communication cable is faulty. 3. The communication parameters of FC group are set improperly.	1. Check the cabling of the PC. 2. Check the communication cabling. 3. Set the communication parameters properly.
Err17	Contactor fault	The contactor is not closed	1. Ask for technical service.
Err18	Current detection fault	1. Current detection circuit is abnormal. 2. Control circuit is abnormal.	1. Ask for technical service.
Err19	Motor auto-tuning fault	1. The motor parameters are not set according to nameplate. 2. The motor auto-tuning times out.	1. Set the motor parameters according to the nameplate properly. 2. Check the cable connecting the AC Drive and the motor.
Err21	Data overflow	1. The control board is abnormal.	1. Ask for technical service.
Err22	On-power EEPROM check fault	1. The EEPROM chip is damaged.	1. Ask for technical service.
Err23	Short circuit to ground	1. The motor is short circuited to the ground. 2. The drive board is abnormal.	1. Replace the cable or motor. 2. Ask for technical service.

Fault code	Fault type	Reason	Solution
Err26	Running time arrival	1. The running time reaches the setting value.	1. Clear the record through the parameter initialization function.
Err27	User-defined fault 1	1. The user-defined fault 1 signal is input DI terminal.	1. Check the input DI terminal or the function of user-defined fault 1.
Err28	User-defined fault 2	1. The user-defined fault 2 signal is input DI terminal	1. Check the input DI terminal or the function of user-defined fault 2.
Err29	On-power arrival time	1. The accumulative power-on time reaches the setting value.	1. Clear the record through the parameter initialization function.
Err31	PID feedback loss during running	1. PID feedback signal is abnormal. 2. PID actual feedback is less than feedback loss detection.	1. Check the PID feedback signal. 2. Correctly set parameters about PID.
Err32	Current sensor failure	Abnormal current detection	Check current sensor wiring or seek technical support.
Err40	With-wave current limit fault	1. The load is too heavy or lockedrotor occurs on the motor. 2. The AC Drive model is of too small power.	1. Reduce the load and check the motor. 2. Select the AC Drive of higher power.
E098/ E099	Internal communication failure	1. The line of keypad communication is abnormal. 2. Control board and keypad is abnormal.	1. Replace the keypad communication line. 2. Ask for technical service.

Table 6-1-1 Faults and solutions

6.2 Common faults and solutions

SN	Fault	Possible causes	Solutions
1	No display at power-on state	1. The input power of AC Drive is abnormal. 2. The control board has a bad contact with cable that is connected to the keypad. 3. The AC Drive is abnormal.	1. Check the input power. 2. Re-connect the cable. 3. Ask for technical service.
2	The motor does not rotate after the AC Drive runs.	1. The motor is damaged. 2. The motor cables is abnormal. 3. The cable between the drive board and control board is in poor contact. 4. The AC Drive is abnormal.	1. Replay the motor. 2. Ensure the cable between the AC Drive and the motor is normal. 3. Check the cable between the drive board and control board. 4. Ask for technical service.
3	DI termianls are disabled.	1. The parameters are set incorrectly. 2. The external signal is incorrect. 3. The control board is abnormal.	1. Check and reset the parameters in group F5. 2. Re-connect the external signal cables. 3. Ask for technical service.
4	AC Drive interference	1. Carrier frequency setting is not suitable. 2. The grounding method of the AC Drive and the motor is incorrect. 3. The wire between the AC Drive and the motor is too long.	1. Reduce the carrier frequency（F0.16） 2. The AC Drive and the motor are effectively grounded and separated from the ground of the peripheral device. 3. Install out reactor or reduce wire distance.
5	Motor noise is too loud.	1. Motor damage or mechanical failure. 2. Carrier frequency setting is too small.	1. Replace the motor or clear the mechanical fault. 2. Increase the carrier frequency appropriately.
6	Switch trip	1. Installed a leakage switch or an air switch overload. 2. The input power of AC Drive is abnormal. 3. The AC Drive is damaged.	1. Replay the leakage switch or replay the larfer capacity air switch. 2. Eliminate whether the input power is shorted. 3. Ask for technical service.

Table 6-2-1 Common faults and solutions

CHAPTER 7 FUNCTIONAL PARAMETER DETAILS

F0 GROUP BASIC PARAMETERS

F0.00	Motor control mode		Default	0
	Setting Range	0	Sensorless vector control（SVC）	
		1	V/F Control	

0：Sensorless vector control（SVC）

Refers to the open loop vector. It is suitable for general high-performance control occasions, one AC drive can only drive one motor. Such as machine tools, centrifuges, wire drawing machines, injection molding machines and other loads.

1:V/F Control

It is suitable for occasions where the load requirements are not high or one AC drive drives multiple motors, such as fans and pumps.

Tip: The motor parameter identification process must be carried out when selecting the SVC mode. Only accurate motor parameters can give full play to the advantages of it

F0.01	Command source selection		Default	0
	Setting Range	0	Keypad control	
		1	Terminal control	
		2	Communication control	

Select the source of AC drive control command.

AC drive commands include: start, stop, forward, reverse, jog, etc.

0:Keypad control（“LOCAL/REMOT”LED off）;

Command control is performed by the RUN and STOP/RESET keys on the Keypad.

1:Terminal control（“LOCAL/REMOT”LED on）;

Command control is carried out by multi-function input terminals FWD, REV, FJOG, RJOG, etc.

2:Communication control（“LOCAL/REMOT”Led blinking）

Command control is given by the upper machine through communication.

F0.02	UP/DOWN standard		Default	0
	Setting Range	0	Running frequency	
		1	Set frequency	

This function is only valid for the digital setting of the frequency source. It is used to determine whether the set frequency is the current operating frequency or the current target frequency in UP/DOWN. .

F0.03	Setting main frequency source X		Default	1
	Setting Range	0	Digital setting (non-retentive at power failure)	
		1	Digital setting (retentive at power failure)	
		2	AI1	
		3	AI2	
		4	Reserved	
		5	PULSE setting(DI6)	
		6	Multi-stage speed setting	
		7	Simple PLC	
		8	PID	
		9	Communication setting	

Select the main source of the AC drive's input frequency. There are 10 main frequency sources:

0:Digital setting (non-retentive at power failure)

The initial value is 0. The frequency can be increased or decreased by the pulse knob, and the set frequency value of the inverter can be changed by the ▲/▼ keys of the keyboard (or UP and DOWN of the multi-function input terminals).

Non-retentive means that after the AC drive is powered off, the set frequency value will be restored to 0; it will be cleared after switching as the frequency source, so this parameter should not be the object of frequency source switching.

Digital setting (retentive at power failure)

The initial value is the value of F0.08 "Keypad setting frequency".

The set frequency value of the inverter can be changed by the ▲/▼ keys of the keyboard (or UP and DOWN of the multi-function input terminals).

Retentive means that when the AC drive is powered on again after power failure, the set frequency is the value before the last power failure (note that it is used in conjunction with F0.23).

2:AI1

3:AI2

Means that the frequency is determined by the analog input terminal. The standard unit provides 2 analog input terminals (AI1, AI2), among which AI1 is 0V~10V voltage input, AI2 can be 0V~10V voltage input, or 4mA~20mA current input, Selected by jumper J8 on the control board.

4/5. PULSE setting（Reserved）

The set frequency is given by the terminal pulse.

Pulse given signal specifications: voltage range 9V~30V, frequency range 0kHz~100kHz.

Note: Pulse reference can only be input from the multi-function input terminal, **requires custom control board development.**

6. Multi-stage speed

Select multi-stage speed operation mode. Need to set the F5 group "input terminals" and FD group "multi-stage speed and PLC" parameters to determine the corresponding relationship between the given signal and the given frequency.

7. Simple PLC

Select simple PLC mode. When the frequency source is simple PLC, you need to set the FD group "multi-speed and PLC" parameters to determine the set frequency.

8. PID

Select process PID control. At this time, you need to set the F9 group "PID function of process control ". The running frequency of the inverter is the frequency value after PID action. For the meaning of PID given source, given amount, feedback source, etc., please refer to the introduction of "PID Function of process control" in F9 group.

9. Communication setting

Means that the main frequency source is given by the upper machine through communication.

F0.04	Setting auxiliary frequency source Y		Default	0
	Setting Range	0	Digital setting (non-retentive at power failure)	
		1	Digital setting (retentive at power failure)	
		2	AI1	
		3	AI2	
		4	Reserved	
		5	PULSE setting(reserve)	
		6	Multi-stage speed setting	
		7	Simple PLC	
		8	PID	

		9	Communication setting

When the auxiliary frequency source is used as an independent frequency given channel (that is, the frequency source is selected to switch from X to Y), its usage is the same as that of the main frequency source X.

When the auxiliary frequency source is used as a superimposed reference (that is, the frequency source is selected as X+Y, X to X+Y switching or Y to X+Y switching), there are the following special features:

1. When the auxiliary frequency source is digital setting or pulse knob setting, the preset frequency (F0.08) does not work. You can use the ▲/▼ keys of the keyboard (or UP, DOWN of the multi-function input terminal) to adjust up and down based on the given frequency.

2. When the auxiliary frequency source is analog input setting (AI1, AI2) or pulse input setting, 100% of the input setting corresponds to the auxiliary frequency source range (see the description of F0.05 and F0.06). If you need to adjust up and down on the basis of the main set frequency, please set the corresponding setting range of the analog input to .n%~+n%.

3. When the frequency source is pulse input setting, it is similar to analog input setting.

Tip: The selection of auxiliary frequency source Y and the main frequency source X cannot be the same, that is, the main and auxiliary frequency sources cannot use the same frequency given channel.

F0.05	Range of auxiliary frequency source Y		Default	0
	Setting Range	0	Relative to the maximum frequency	
		1	Relative to the frequency source X	
F0.06	Percentage range of auxiliary frequency source Y		Default	0
	Setting Range		0%~150%	

When the frequency source is selected as the frequency superposition setting (F0.07 is set to 1, 3 or 4), it is used to determine the adjustment range of the auxiliary frequency source. F0.05 is used to determine the relative object of the range. If it is relative to the maximum frequency (F0.10), its range is a fixed value; if it is relative to the main frequency source X, its range will follow the change of main frequency source X.

F0.07	Frequency reference selection		Default	0
	Setting Range	One’s digit	Selection of frequency source	

		0	main frequency source X
		1	main and auxiliary calculation results（The calculation relationship is determined by the ten’s digits）
		2	Switchover between X and Y
		3	Switchover between X and main (X) & auxiliary(Y) calculation
		4	Switchover between Y and main (X) & auxiliary(Y) calculation
		Ten’s digit	X and Y calculation relationship
		0	X+Y
		1	X-Y
		2	MAX(X, Y)
		3	MIN(X, Y)
		4	X* Y

Use this parameter to select the frequency given channel. The frequency setting is realized by the combination of the main frequency source X and the auxiliary frequency source Y.

One’s digit:Selection of frequency source

0:main frequency source X

The main frequency X is used as the target frequency.

1:main and auxiliary calculation results

The main and auxiliary calculation result is used as the target frequency (The calculation relationship is determined by the ten’s digits).

2:Switchover between X and Y

When the multi-function input terminal 18: frequency source switching is invalid, the main frequency source X is taken as the target frequency.

When the multi-function input terminal 18: frequency source switching is valid, the auxiliary frequency source Y is taken as the target frequency.

3:Switchover between X and main (X) & auxiliary(Y) calculation

When the multi-function input terminal 18: frequency source switching is invalid, the main frequency source X is taken as the target frequency.
When the multi-function input terminal 18: frequency source switching is valid, the main and auxiliary calculation result is taken as the target frequency.

4:Switchover between Y and main (X) & auxiliary(Y) calculation
When the multi-function input terminal 18: frequency source switching is invalid, the auxiliary frequency source Y is taken as the target frequency.
When the multi-function input terminal 18: frequency source switching is valid, the main and auxiliary calculation result is taken as the target frequency.

Ten's digit:X and Y calculation relationship:
0:X+Y
The sum of the main frequency source X and the auxiliary frequency source Y serves as the target frequency. Realize frequency superposition given function.

1:X-Y
The difference between the main frequency source X and the auxiliary frequency source Y serves as the target frequency.

2:MAX(X, Y)
Take the main frequency source X and auxiliary frequency source Y with the largest absolute value as the target frequency.

3:MIN(X, Y)
Take the main frequency source X and the auxiliary frequency source Y with the smallest absolute value as the target frequency.

4: X * Y
The result of multiplying the main frequency source X by the auxiliary frequency source Y is used as the target frequency.

F0.08	Keypad setting frequency	Default	50.00Hz

	Setting Range	0.00~Maximum frequency F0.10 (valid for digital setting for frequency source selection)

When the frequency source is selected as "digital setting" or "terminal UP/DOWN", the function code value is the initial value of the frequency digital setting of the inverter.

F0.09	Running direction selection		Default	0
	Setting Range	0	Forward direction	
		1	Reverse direction	

By changing this parameter, the rotation direction of the motor can be changed without changing any other parameters. Its function is equivalent to realizing the conversion of the rotation direction of the motor by adjusting any two cables of the motor (U, V, W).

Tip: After the parameters are initialized, the motor running direction will return to the original state. Use it with caution when it is forbidden to change the rotation of the motor after the system is debugged.

F0.10	Maximum Frequency		Default	50.00 Hz
	Setting Range		50.00Hz~500.00Hz	
F0.11	Source of frequency upper limit		Default	0
	Setting Range	0	Set by F0.12	
		1	AI1	
		2	AI2	
		3	Reserved	
		4	PULSE setting(Reserved)	
		5	Communication setting	

Define the source of the upper limit frequency. The upper limit frequency can come from the digital setting (F0.12) or the analog input channel. When using the analog input to set the upper limit frequency, 100% of the analog input setting corresponds to F0.12.

For example, in torque control, speed control is invalid. In order to avoid "overspeeding" due to material disconnection, the upper limit frequency can be set by analog. When the inverter runs to the upper limit frequency value, the torque control is invalid and the inverter continues to run at the upper limit frequency.

F0.12	Frequency upper limit	Default	50.00Hz
	Setting Range	Frequency lower limit (F0.14)~F0.10	
F0.13	Upper limit frequency offset	Default	0.00Hz
	Setting Range	0.00Hz ~F0.10	

When the upper limit frequency is given by the analog input, this parameter is used as the offset of the upper limit frequency calculation, and this upper limit frequency offset is added to the set value of the analog upper limit frequency as the final upper limit frequency setting value.

F0.14	Frequency lower limit	Default	0.00Hz
	Setting Range	0.00Hz~F0.12	

When the inverter starts to run, it starts from the starting frequency. If the given frequency is less than the lower limit frequency during operation, the inverter will run at the lower limit frequency, stop or run at zero speed. You can set which operating mode to use through F0.15.

F0.15	The function of frequency lower limit		Default	0
	Setting Range	0	Running at frequency lower limit	
		1	Stop	
		2	Standby（Running at 0 Hz）	

Select the running state of the AC drive when the set frequency is lower than the lower limit frequency. In order to prevent the motor from running at low speed for a long time, this function can be used to choose to stop.

F0.16	Carrier Frequency	Default	Model Dependent
	Setting Range	0.5kHz~16.0kHz	

This function adjusts the carrier frequency of the AC drive. By adjusting the carrier frequency, the motor noise can be reduced, the resonance point of the mechanical system can be avoided, the leakage current of the line to the ground and the interference caused by the inverter can be reduced.

When the carrier frequency is low, the higher harmonic components of the output current increase, the

motor loss increases, and the motor temperature rise increases.

When the carrier frequency is high, the motor loss will decrease and the motor temperature rise will decrease, but the AC drive loss will increase, the AC drive temperature rise will increase, and the interference will increase.

The effect of adjusting the carrier frequency on the following performance:

Carrier Frequency	Low → High
Motor Noise	Much → Little
Output Current Waveform	Bad → Good
Motor Temperature Rise	High → Low
AC Drive Temperature Rise	Low → High
Leakage Current	Low → High
External Radiation Interference	Low → High

F0.17	PWM Output Method Selection	Default	0
	Setting Range	0:5/7-stage automatic switching 1:7-stage	

Method selection of PWM Output Method

F0.18	Acceleration Time 1	Default	Model Dependent
	Setting Range	0.0s~6500.0s	
F0.19	Deceleration Time 1	Default	Model Dependent
	Setting Range	0.0s~6500.0s	

The acceleration time refers to the time required to accelerate from zero frequency to the acceleration/deceleration base frequency (determined by F0.24), see t1 in Figure 6.1.
The deceleration time refers to the time required to decelerate from the acceleration/deceleration base frequency (determined by F0.24) to zero frequency, see t2 in Figure 6.1.

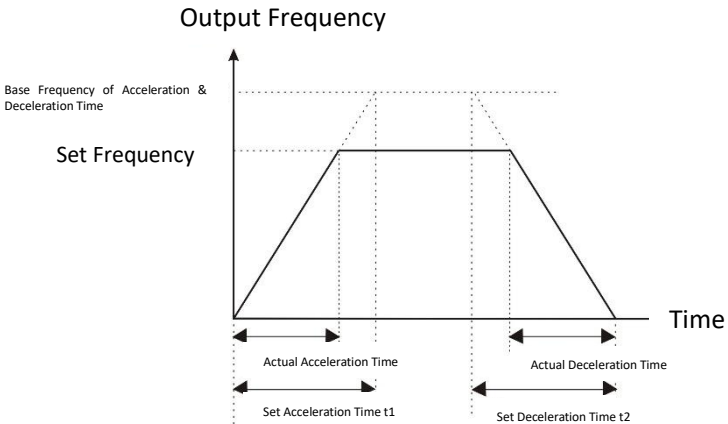

Figure 6-1 Schematic diagram of acceleration and deceleration time

Pay attention to the difference between actual acceleration and deceleration time and set acceleration and deceleration time.

There are 4 groups of acceleration and deceleration time options

Group 1:F0.18. F0.19;

Group 2:F8.03. F8.04;

Group 3:F8.05. F8.06;

Group 4:F8.07. F8.08.

The acceleration and deceleration time can be selected through the multi-function digital input terminals (F5.00~F5.05).

F0.20	Default setting restoring		Default	0
	Setting Range	0	No operation	
		1	Restore to factory default setting (not including motor parameters)	
		2	clear fault record	

After changing this parameter to 1 or 2, all parameters will be initialized, and then this parameter will be reset to 0 automatically.

1:Restoring default settings,not including the F2 group parameters and error records.

2:Cleaning error records.

Cleaning error records. accumulative running time（F7.09）. accumulative power-on time（F7.13）. accumulative power consumption（F7.14）.

F0.21	Function code modification attribute		Default	0
	Setting range	0	Modifiable	
		1	Non-modifiable	

Function code modification attribute,After locking, it can prevent the parameter value from being changed by mistake

0:All parameters can be changed

1:All parameters can only be viewed,but not changed,except F0.21

F0.22	Digital setting frequency shutdown memory selection		Default	1
	Setting range	0	Non-retentive	
		1	Retentive	

This function is only valid when frequency source is digital setting

0:Non-retentive, Refers to the digital set frequency value restored to the set value of F0.08 after the AC drive stops.

1:Retentive, Refers to the digital set frequency value restored to the set frequency after the AC drive stops.

F0.23	Acceleration & deceleration time unit		Default	1
	Setting range	0	1s	
		1	0.1s	

		2	0.01s

This function is used to determine all acceleration and deceleration time units. Note that when the value is modified, the actual acceleration/deceleration time will also change accordingly (the position of the decimal point changes, and the actual display digits remain unchanged), so it is necessary to readjust the size of various acceleration/deceleration settings according to the situation. Pay attention to the following function codes: F0.18, F0.19, F8.01, F8.02, F8.03, F8.04, F8.05, F8.06, F8.07, F8.08.

F0.24	Base Frequency of Acceleration & Deceleration Time		Default	0
	Setting range	0	Maximum frequency（F0.10）	
		1	Set Frequency	
		2	100Hz	

Define the frequency range corresponding to the acceleration and deceleration time. See Figure 6.1 Acceleration and deceleration time diagram

F0.25	Cooling Fan Running Option		Default	0
	Setting range	0	Automatic running	
		1	Keep running when power on	

This function is used to set the operating mode of the cooling fan. This setting can be adjusted according to changes in operating conditions to achieve a balance between maintaining continuous maximum heat dissipation and extending fan life.

0:Automatic running.When the motor is running, the fan runs; when the motor stops, the fan stops running after a delay of 30 seconds. When the temperature of the AC drive module exceeds 50 degrees, the fan also starts to run.

1:Keep running .The fan will keep running after AC drive is powered on

F0.26	Frequency Command Decimal Point		Default	2
	Setting range	1	One Decimal Place	
		2	Two Decimal Place	

The decimal place of the control frequency related instruction, the default is 2 decimal places. After the parameter is set, the decimal place of the parameter associated with the frequency is automatically

adjusted. This parameter is not affected by F0.20.

F0.27	Multi-speed priority		Default	1
	Setting range	0	Invalid	
		1	Valid	

F1 GROUP START&STOP CONTROL

F1.00	Starting mode		Default	0
	Setting range	0	Start directly（When the starting DC braking time is not 0, the DC braking will be performed first）	
		1	Speed tracing and start	
		2	Pre-excitation start（When the pre-excitation time is not 0, first pre-excitation and then start）	

0:Start directly

if F1.06 startup DC braking/pre-excitation time, when it is set to 0, start from the startup frequency. When the setting is not 0, implement DC braking first and then start, which can solve the problem of reverse rotation when starting with small inertia load.

1 Speed tracing and start

The AC drive first detects the rotation and speed of the motor, and then starts according to the real-time speed. It is suitable for restarting after instantaneous power failure with large inertial loads or for smooth restarting of rotating equipment. Set accurate F2 group motor parameters to obtain better speed tracking and restart performance.

2:Pre-excitation start（Asynchronous motor）

Pre-excitation current and time share function codes with DC braking current and time.

If F1.06 startup DC braking/pre-excitation time, when it is set to 0, start from the starting frequency. When the setting is not 0, the pre-excitation is performed first and then the start is performed to improve the dynamic response speed.

F1.01	Speed tracking mode		Default	0
	Setting Range	0	Start with the frequency of input power failure	
		1	Start at zero speed	
		2	Start at the maximum frequency F0.10	
		3	Excitation search	

Provide 4 speed tracking methods:

0:Tracking down from the frequency during a power outage, this method is usually used.

1:Start tracking upwards from 0 frequency, use in the case of a longer power outage and restart

2:Track down from the maximum frequency, generally used for generating loads

3:Output the excitation current to estimate the current frequency of the motor. After the estimation is successful, the inverter will start at the estimated frequency

F1.02	Speed tracking coefficient	Default	20
	Setting Range	1~100	

In speed tracking restart mode, set the speed of speed tracking. The larger the parameter setting, the faster the tracking speed. But too large may cause unreliable tracking.

F1.03	Starting frequency	Default	0.00Hz
	Setting Range	0.00Hz~10.00Hz	
F1.04	Hold time of starting frequency	Default	0.0s
	Setting Range	0.0s~100.0s	

To ensure the torque at startup, please set an appropriate startup frequency. In addition, in order to wait for the magnetic flux to be established when the motor starts, the starting frequency is maintained for a certain period of time and then the acceleration starts. The starting frequency value F1.03 is not limited by the lower limit frequency. If the given frequency (frequency source) is less than the starting frequency, the inverter cannot be started and is in the standby state. When switching between forward and reverse, the start frequency holding time has no effect. The hold time is not included in the acceleration time, but is included in the running time of the simple PLC.

F1.05	DC braking current at start-up/Pre-excitation current	Default	0%
	Setting Range	0%~100%	
F1.06	DC braking time at start-up/Pre-excitation time	Default	0.0s
	Setting Range	0.0s~100.0s	

Starting DC braking is generally used to completely stop the motor before starting. Pre-excitation is generally used to establish a magnetic field before starting the motor to improve response speed.

If the start mode is direct start, the AC drive will first perform DC braking according to the set start DC braking current when starting, and then start running after the set start DC braking time. If the DC braking time is set to 0, it will start directly without DC braking. The greater the DC braking current, the greater the braking force. If the start mode is asynchronous motor pre-excitation start, the AC drive will first establish the magnetic field according to the set start pre-excitation current when starting, and then start running after the set start pre-excitation time. If the pre-excitation time is set to 0, it will start directly without pre-excitation. Start DC braking/pre-excitation current refers to the percentage relative to the AC drive rated current.

F1.07	Acceleration & deceleration method		Default	0
	Setting Range	0	Linear acceleration/deceleration	
		1	S-curve acceleration/deceleration A	
		2	S-curve acceleration/deceleration B	

Select the frequency change mode of the AC drive during the start and stop process.

0:Linear acceleration/deceleration

The output frequency increases or decreases linearly. The acceleration/deceleration time changes according to the set acceleration/deceleration time. VB series AC drive provides 4 kinds of acceleration and deceleration time. The acceleration and deceleration time can be selected through the multi-function digital input terminals (F5.00~F5.05).

1:S-curve acceleration/deceleration A

The output frequency increases or decreases according to the S curve. S curve is generally used in places where the start and stop process is relatively gentle, such as elevators and conveyor belts. Function codes F1.08 and F1.09 respectively define the time proportions of the start and end segments of S curve acceleration and deceleration

2:S-curve acceleration/deceleration B

In this acceleration and deceleration curve, the rated motor frequency fb is always the inflection point of the S curve. As shown in Figure 6-3. Generally used in the high-speed area above the rated frequency, where short-term acceleration and deceleration are required.

When the set frequency is above the rated frequency, the acceleration and deceleration time is:

$$t = (\frac{4}{9} \times (\frac{f}{f_b})^2 + \frac{5}{9}) \times T$$

Among them, f is the set frequency; fb is the rated frequency of the motor;

T is the time to accelerate from 0 frequency to rated frequency fb.

F1.08	Time proportion of S-curve start segment	Default	30.0%
	Setting Range	0.0%~70.0%	
F1.09	Time proportion of S-curve end segment	Default	30.0%
	Setting Range	0.0%~70.0%	

The function codes F1.08 and F1.09 respectively define the time proportions of the start section and the end section of S-curve acceleration/deceleration A, and both meet: F1.08 + F1.09 ≤ 100.0%.

In Figure 6.2, t1 is the parameter defined by parameter F1.08. During this period of time, the slope of the output frequency change gradually increases. t2 is the time defined by parameter F1.09, during which the slope of the output frequency change gradually changes to 0. During the time between t1 and t2, the slope of the output frequency change is fixed.

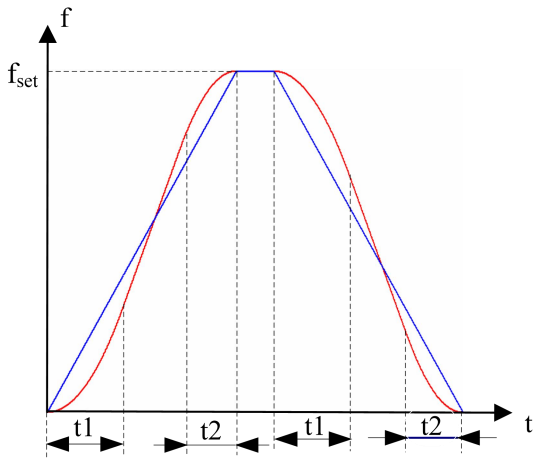

Figure 6-2 S Schematic diagram of curve acceleration and deceleration A

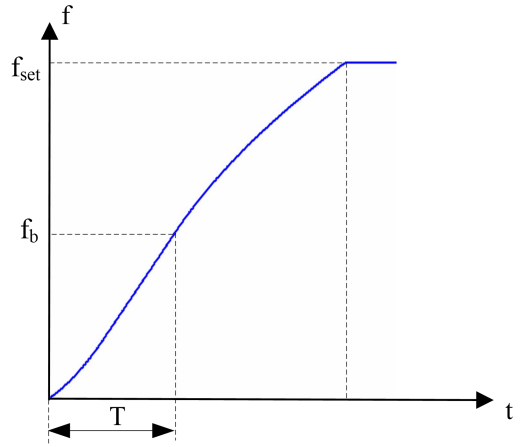

Figure 6-3 S Schematic diagram of curve acceleration and deceleration B

F1.10	Stop mode	Default	0
	Setting Range	0	Decelerate to stop
		1	Free stopping

0:Decelerate to stop

After the stop command is valid, the AC drive will reduce the output frequency according to the deceleration mode and the defined acceleration/deceleration time, and stop after the frequency drops to 0.

1:Free stopping

After the stop command is valid, the AC drive immediately terminates the output. The load stops freely according to mechanical inertia.

F1.11	Trigging frequency of DC braking at stop	Default	0.00Hz
	Setting Range	0.00Hz~max.frequency	
F1.12	Waiting time of DC braking at stop	Default	0.0s
	Setting Range	0.0s~36.0s	

F1.13	The current of DC braking at stop	Default	0%
	Setting Range	0%~100%	
F1.14	The time of DC braking at stop	Default	0.0s
	Setting Range	0.0s~36.0s	

Trigging frequency of DC braking at stop: During deceleration to stop, when the output frequency is less than this frequency, the DC braking process at stop will start.

Waiting time of DC braking at stop: When the output frequency is reduced to the start frequency of F1.11 stop DC braking during stop, the AC drive will stop output and start timing. After the delay time set by F1.12, DC will start again brake. It is used to prevent over-current faults caused by DC braking when the speed is high.

The current of DC braking at stop: refers to the added DC braking amount. The larger the value, the stronger the DC braking effect.

The time of DC braking at stop: the time added by the DC braking amount. When this value is 0, it means that there is no DC braking process and the AC drive will stop according to the set deceleration stop process.

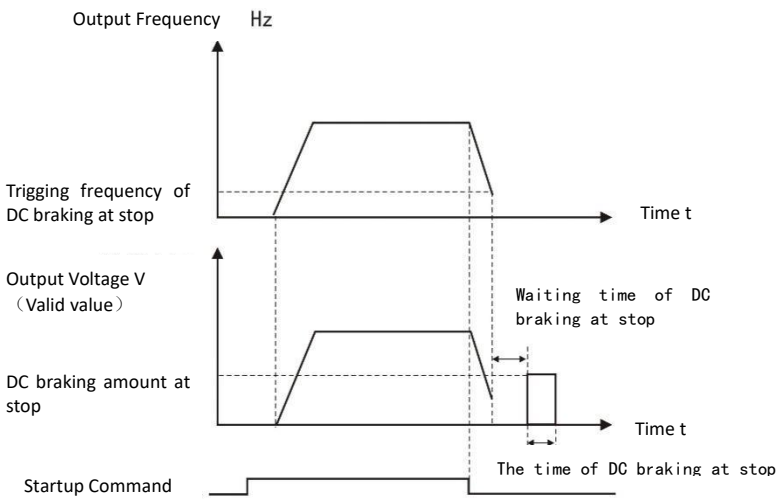

Figure 6-4 Schematic diagram of DC braking at stop

F1.15	Brake use rate	Default	100%
	Setting Range	0%~100%	

It is valid for inverters with built-in braking unit. The braking effect of the dynamic braking function can be adjusted.

F1.16	Zero frequency output selection	Default	1
	Setting Range	0	Open
		1	Closed

Setting whether the AC drive has output when running frequency is 0

F2 GROUP MOTOR PARAMETERS

F2.00	Motor type selection	Default	0
	Setting Range 0	Ordinary asynchronous motor	
	Setting Range 1	Variable frequency asynchronous motor	
	Setting Range 2	Permanent magnet synchronous motor	
	Setting Range 3	Single-phase asynchronous motor	
F2.01	Motor rated power	Default	Model Dependent
	Setting Range	0.1kW~400.0kW	
F2.02	Motor rated Voltage	Default	Model Dependent
	Setting Range	0V~440V	
F2.03	Motor rated current	Default	Model Dependent
	Setting Range	0.01A~655.35A(AC drive<=55kW) 0.1A~6553.5A(AC drive >55kW)	
F2.04	Motor rated frequency	Default	Model Dependent
	Setting Range	0.00Hz~Maximum frequency F0.10	
F2.05	Motor rated speed	Default	Model Dependent
	Setting Range	0rpm~36000rpm	

Caution
1. Please set according to the nameplate parameters of the motor. 2. The excellent control performance of vector control requires accurate motor parameters, and accurate parameter identification comes from the correct setting of motor rated parameters. 3. In order to ensure the control performance, please configure the motor according to the standard adapted motor of the AC drive. If the power of the motor is too far from the standard adapted motor, the control performance of the inverter will be significantly reduced.

F2.06	Asynchronous motor stator resistance	Default	Model Dependent
	Setting Range	0.001Ω ~65.535Ω (AC drive<=55kW) 0.0001Ω ~6.5535Ω (AC drive >55kW)	
F2.07	Asynchronous motor rotator resistance	Default	Model Dependent
	Setting Range	0.001Ω ~65.535Ω (AC drive<=55kW) 0.0001Ω ~6.5535Ω (AC drive >55kW)	
F2.08	Asynchronous motor leakage inductance	Default	Model Dependent
	Setting Range	0.01mH~655.35mH(AC drive<=55kW) 0.001mH~65.535mH(AC drive >55kW)	
F2.09	Asynchronous motor mutual inductance	Default	Model Dependent
	Setting Range	0.1mH~6553.5mH(AC drive<=55kW) 0.01mH~655.35mH(AC drive >55kW)	
F2.10	Asynchronous motor no-load current	Default	Model Dependent
	Setting Range	0.01A~F2.03(AC drive<=55kW) 0.1A~F2.03(AC drive >55kW)	

After the automatic tuning ends normally, the setting values of the asynchronous motor parameters (F2.06~F2.10) are automatically updated.

After changing the motor rated power F2.01 each time, the AC drive will automatically restore the default standard motor parameters from F2.06 to F2.10. (Four-pole Y series asynchronous motor)
If it is impossible to tune the asynchronous motor in the site, you can manually input it with reference to the known parameters of similar motors.

F2.11	Tuning selection		Default	0
	Setting Range	0	0:No operation	
		1	1:The asynchronous machine static tuning.	
		2	2:The asynchronous machine is fully tuned	

Tip: Before tuning, you must set the correct motor type and rated parameters (F2.00—F2.05)
0: No operation, that is, tuning is prohibited.

1: The asynchronous motor is statically tuned, which is suitable for occasions where the motor and the load are not easily disconnected and cannot be rotated and tuned.
Action description: After setting the function code to 1, and pressing the RUN key to confirm, the AC drive will perform static tuning.

2: Complete tuning of asynchronous motor. In order to ensure the dynamic control performance of the AC drive, please select complete tuning, the motor must be disconnected from the load (no load) during rotary tuning.

After the complete tuning is selected, the AC drive will perform static tuning first. After the static tuning, the motor will accelerate to 80% of the rated frequency of the motor according to the acceleration time set by F0.18, and hold for a period of time, and then follow the deceleration time set by F0.19 Decelerate to zero speed and end the rotation tuning.
Action description: After setting the function code to 2, and pressing the RUN key to confirm, the AC drive will perform rotary tuning.

Tuning instructions:
When F2.11 is set to 1 or 2 and then press the ENT key, "TUNE" is displayed and flashes at this time, and then press the RUN key to start parameter tuning, and the displayed "TUNE" stops flashing at this

time. When the tuning is over, the display returns to the stop state interface. During the tuning process, you can press the STOP button to stop tuning. When the tuning is completed, the value of F2.11 automatically returns to 0.

Note: Tuning can only be effective in keyboard control mode, and the factory default value of acceleration and deceleration time is recommended.

F2.12	G/P type selection		Default	Model dependent
	Setting Range	1	General model (G) (constant torque load model)	
		2	Pump model (P) (draught fan, water pump type load model)	

This parameter is only for users to view the factory model and cannot be changed.

1: Suitable for constant torque load with specified rated parameters

2: Suitable for variable torque loads with specified rated parameters (fans, water pump loads)

F2.13	Single-phase motor turns ratio	Default	140
	Setting Range	50~200	

The main and auxiliary winding currents can be changed by adjusting the single-phase motor turns ratio. Generally, reducing the single-phase motor turns ratio can increase the main winding current, reduce the auxiliary winding current, and reduce the motor heating (only effective when F2.00 = 3) .

F3 GROUP VECTOR CONTROL PARAMETERS

F3 group function codes are only valid in vector control mode, that is, it is valid when F0.00=0, and it is invalid when F0.00=1.

F3.00	Speed loop proportional gain 1	Default	30
	Setting range	1~100	
F3.01	Speed loop integral time 1	Default	0.50s
	Setting range	0.01s~10.00s	
F3.02	Switchover frequency 1	Default	5.00Hz
	Setting range	0.00~F3.05	
F3.03	Speed loop proportional gain 2	Default	20
	Setting range	0~100	
F3.04	Speed loop integral time 2	Default	1.00s
	Setting range	0.01s~10.00s	
F3.05	Switchover frequency 2	Default	10.00Hz
	Setting range	F3.02~Maximum frequency F0.10	

F3.00 and F3.01 are PI adjustment parameters when the running frequency is lower than switchover frequency 1 (F3.02).

F3.03 and F4.04 are PI adjustment parameters for the frequency band between the operating frequency greater than the switchover frequency 2.

The PI parameters in the frequency band between switchover frequency 1 and switchover frequency 2 are linear switching of two sets of PI parameters, as shown in the following figure:

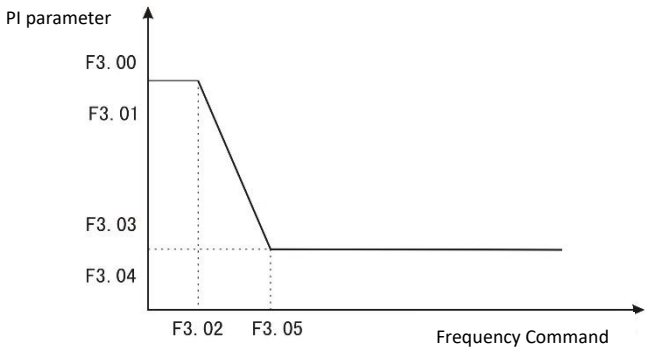

Figure 6-5 Schematic diagram of PI parameters

By setting the proportional coefficient and integral time of the speed regulator, the speed dynamic response characteristics of the vector control can be adjusted. Increasing the proportional gain and reducing the integral time can speed up the dynamic response of the speed loop. If the proportional gain is too large or the integral time is too small, the system may oscillate.

Suggested adjustment method:

If the factory parameters cannot meet the requirements, fine-tune the parameters based on the factory value: first increase the proportional gain to ensure that the system does not oscillate; then reduce the integration time to make the system have faster response characteristics and smaller overshoot.

Note: Improper setting of PI parameters may result in excessive speed overshoot. Even when the overshoot falls back, an overvoltage fault occurs.

F3.06	Slip compensation coefficient of vector control	Default	100%
	Setting range	50%~200%	

In the speed sensorless vector control mode, this parameter is used to adjust the speed stability accuracy of the motor. When the speed of the motor is heavy, increase this parameter, otherwise decrease this parameter.

F3.07	Speed loop filter time constant.	Default	0.000s
	Setting range	0.000s~0.100s	

In vector control mode, the output of the speed loop regulator is the torque current command, and this parameter is used to filter the torque command. Generally, this parameter does not need to be adjusted. When the speed fluctuates greatly, the filter time can be appropriately increased; if the motor oscillates, the parameter should be appropriately reduced.

The speed loop filter time constant is small, the output torque of the AC drive may vary greatly, but the response is fast.

F3.08	Speed control torque upper limit	Default	150.0%
	Setting range	0.0%~200.0%	

In speed control mode, the maximum output torque of the inverter is controlled by F3.08.

F3.09	Speed/torque control		Default 0
	Setting range	0	Speed Control
		1	Torque Control

To select whether the AC drive control mode is speed control or torque control, this function code needs to be judged together with terminal function 29: torque control prohibition and 46: speed control/torque control switching.

When the torque control prohibition is valid, the AC drive is speed control.

When the torque control prohibition is invalid, if the speed control/torque control switch is invalid, the control mode is determined by F3.09; if the speed control/torque control switch is valid, the value of F3.09 is reversed.

When it is torque control, the AC drive running frequency is given by F3.12, F3.13, and the acceleration/deceleration time is given by F3.14, F3.15.

F3.10	Torque upper limit source in torque control		Default	0
	Setting range	0	Digital setting（F3.11）	

		1	AI1
		2	AI2
		3	Reserved
		4	PULSE setting
		5	Communication setting
		6	MIN(AI1,AI2)
		7	MAX(AI1,AI2)
		The full scale of options 1~7 corresponds to F3.11	
F3.11	Digital setting of torque upper limit in torque control	Default	150.0%
	Setting range	-200.0%~200.0%	

F3.10 is used to select the torque upper limit setting source in the torque control mode. When setting by analog, 100% of analog input setting corresponds to F3.11, and 100% of setting corresponds to AC drive matching motor rated torque.

F3.12	Forward maximum frequency of torque control	Default	50.00Hz
	Setting range	0.00Hz~Maximum Frequency（F0.10）	
F3.13	Reverse maximum frequency of torque control	Default	50.00Hz
	Setting range	0.00Hz~Maximum Frequency（F0.10）	

Set the maximum forward or reverse running frequency of the AC drive in torque control mode.

F3.14	Acceleration time of torque control	Default	0.00s
	Setting range	0.00s~65000s	
F3.15	Deceleration time of torque control	Default	0.00s
	Setting range	0.00s~65000s	

Set the frequency acceleration/deceleration time of the AC drive in torque control mode.

F3.16	Torque stiffness coefficient	Default	100.00%

	Setting range	10.0%~120.0%	

In the torque control mode, when the set torque is small, this coefficient can be appropriately reduced to obtain a stable control effect, otherwise, the coefficient can be appropriately increased to obtain a stable control effect.

F3.17	M axis current loop proportional gain	Default	2000
	Setting range	0~60000	
F3.18	M axis current loop integral gain	Default	1300
	Setting range	0~60000	
F3.19	T axis current loop proportional gain	Default	2000
	Setting range	0~60000	
F3.20	T axis current loop integral gain	Default	1300
	Setting range	0~60000	

The current loop control parameters in the MT coordinate system and the synchronous motor dq coordinate system will be automatically identified after complete parameter identification, and generally do not need to be modified.

The bandwidth of the current loop directly determines the response speed of the electromagnetic torque. If the adjustment parameters are too strong, the current loop will be out of adjustment, causing the entire control loop to oscillate; when the current oscillates and torque fluctuations are large, you can manually adjust this group of parameters to improve the effect .

F3.21	The speed loop integral separation	Default	0
	Setting range	0	Invalid
		1	Valid

F3.24	Torque control static friction compensation coefficient	Default	100
	Setting range	100~300	

F3.25	Torque mode friction compensation time	Default	0
	Setting range	0~100s	

During startup, torque command 1 = F3.11 * F3.24 / 100; after maintaining time F3.25 seconds, it will be restored to torque command 2 = F3.11; torque command 1/2 switching requires torque acceleration and deceleration time F3.14/F3.15.

F4 GROUP V/F CONTROL PARAMETERS

This group of function codes is only valid for V/F control (F0.00=1), and invalid for vector control.

V/F control is suitable for general loads such as fans and water pumps, or applications where one AC drive has multiple motors, or the power of the AC drive is one level lower or two levels higher than the motor power.

F4.00	V/F curve setting	Default	0
	Setting Range	0	Linear V/F
		1	Multi-point V/F
		2	Square V/F
		3~9	Reserved
		10	V/F complete separation
		11	V/F half separation

For fans and pumps, you can choose square V/F control.

Common VF control method

0: Straight line V/F curve. Suitable for ordinary constant torque load.

1: Multi-point V/F curve. Suitable for special loads such as dehydrators and centrifuges.

2: Square V/F curve. Suitable for centrifugal loads such as fans and pumps.

VF separation control method

10: VF complete separation mode. At this time, the output voltage is set separately according to the setting mode of F4.13 (VF separation voltage source).

11: VF semi-separated mode.

In this case, V and F are proportional, and the voltage source is only used to adjust the slope of V/F. At this time, the relationship between V and F is related to the rated voltage and rated frequency of the motor set in group F2. If the voltage source input is X (X is a value of 0~100%), then: V/F=2 * X * (motor rated voltage)/(motor rated frequency)

F4.01	Torque boost	Default	Model dependent
	Setting Range	0.0%~30%	
F4.02	Cut-off frequency of torque boost	Default	50.00Hz
	Setting Range	0.00Hz~Maximum frequencyF0.10	

In order to compensate the low-frequency torque characteristics of V/F control, some boost compensation is made for the AC drive output voltage at low frequency.

If the torque boost is set too large, the motor will easily overheat and the AC drive will easily overcurrent. Generally, the torque boost should not exceed 8.0%. Effective adjustment of this parameter can effectively avoid overcurrent during starting. For larger loads, it is recommended to increase this parameter, and reduce this parameter setting when the load is lighter. When the torque boost is set to 0.0, the AC drive is automatic torque boost. Torque boost torque cut-off frequency: below this frequency, the torque boost torque is valid, if the set frequency is exceeded, the torque boost is invalid, as shown in Figure 6.6.

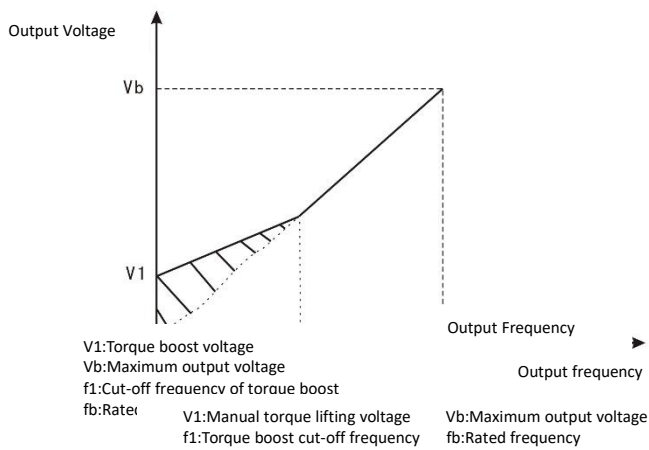

Figure 6-6 Schematic diagram of manual torque boost

F4.03	Multipoint V/F frequency 1	Default	3.00Hz

	Setting Range	0.00Hz~F4.05	
F4.04	Multipoint V/F voltage 1	Default	10.0%
	Setting Range	0.0%~100.0%	
F4.05	Multipoint V/F frequency 2	Default	5.00Hz
	Setting Range	F4.03~F4.07	
F4.06	Multipoint V/F voltage 2	Default	15.0%
	Setting Range	0.0%~100.0%	
F4.07	Multipoint V/F frequency 3	Default	8.00Hz
	Setting Range	F4.05~Motor rated frequency(F2.04)	
F4.08	Multipoint V/F voltage 3	Default	22.0%
	Setting Range	0.0%~100.0%	

Six parameters F4.03~F4.08 define multi-segment V/F curve. The set value of the V/F curve is usually set according to the load characteristics of the motor. Note: V1<V2<V3, F1<F2<F3. Setting the voltage too high at low frequency may cause the motor to overheat or even burn, and the AC drive may over-current stall or over-current protection.

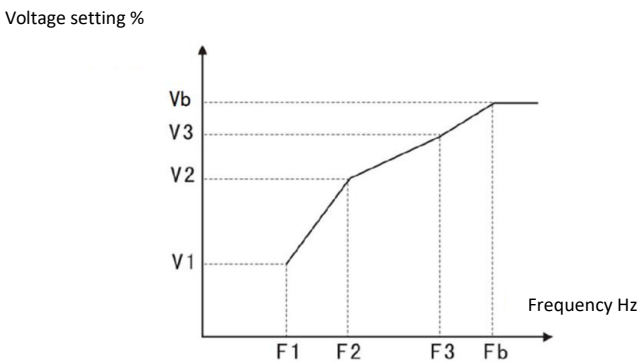

V1~V3: Multipoint V/F voltage 1~3
F1~F3: Multipoint V/F frequency 1~3
Fb:Motor rated frequency F2.04

Figure 6-7 Schematic diagram of V/F curve setting

F4.09	V/F slip compensation	Default	0.0%
	Setting Range	0%~200.0%	

Effective for V/F control. Setting this parameter can compensate for the slip caused by the load during V/F control, and reduce the change in motor speed with load changes during V/F control. Generally 100% corresponds to the rated slip when the motor is loaded with rated load. The slip coefficient can be adjusted according to the following principles: when the load is rated load and the slip compensation coefficient is set to 100%, the speed of the motor with the inverter is basically close to the given speed.

F4.10	V/F over-excitation gain	Default	0
	Setting Range	0~200	

The function of the VF overexcitation gain function is to suppress the rise of the bus voltage during the deceleration of the AC drive, and to prevent the bus voltage from exceeding the overvoltage protection limit value and causing an overvoltage fault. The greater the overexcitation gain, the stronger the suppression effect. The setting instructions are as follows:

1. Generally, the overexcitation gain should be set to 0 when the inertia is small, and the overexcitation gain should be appropriately increased when the inertia is large.
2. If there is a braking resistor, please set the overexcitation gain to 0

F4.11	V/F oscillation suppression gain	Default	Model dependent
	Setting Range	0~100	

Please select this gain as 0 when the motor has no oscillation. Only when the motor obviously oscillates and cannot run normally, increase the gain appropriately. The larger the gain, the more obvious the suppression of oscillation. When using the oscillation suppression function, it is required that the motor rated current and no-load current parameter settings have little deviation from the actual values. The method of selecting the gain is to choose as small as possible under the premise of effectively suppressing the oscillation, so as not to have too much influence on the VF operation.

F4.12	Voltage source for V/F separation		Default	0
	Setting	0	Digital setting(F4.14)	

	Range	1	AI1
		2	AI2
		3	Reserved
		4	PULSE setting(DI6)
		5	Multi-speed instructions
		6	Simple PLC
		7	PID
		8	Communication setting
		(100% corresponds to the rated motor voltage)	

Define the voltage source for VF separation. The output voltage can come from digital setting (F4.13), or from analog input channel, multi-speed command, PLC, PID or communication setting. When using non-digital setting of output voltage, 100% of the input setting corresponds to the rated voltage of the motor, and the absolute value of the input setting is taken as the effective setting value.

0: Digital setting (F4.13); The voltage is directly set through F4.13.

1: AI1 2: AI2 voltage is determined by analog input terminal, AI input 0~100% corresponds to output voltage 0V~rated voltage of motor.

4. PULSE setting (DI6)

The voltage setting is given by the terminal pulse. F5.28~F5.31 need to be set to determine the corresponding relationship between the given signal and the given voltage (100% corresponds to the rated voltage of the motor).

Pulse given signal specifications: voltage range 9V~30V, frequency range 0kHz~100kHz.

Note: Pulse reference can only be input from high-speed pulse input terminal DI6.

5. Multi-speed instructions

When the voltage source is multi-speed, you need to set the F4 group "input terminal" and FC group "multi-speed and PLC" parameters to determine the corresponding relationship between the given signal and the given voltage (100% corresponds to the rated motor voltage).

6. Simple PLC

When the voltage source is a simple PLC, you need to set the FC group "multi-speed and PLC" parameters to determine the given output voltage (100% corresponds to the rated voltage of the motor).

7. PID

Generate output voltage according to PID closed loop. For details, please refer to the introduction of FA group PID.

8. Communication setting

Refers to the voltage given by the host computer through communication (100% corresponds to the

rated voltage of the motor).

F4.13	Voltage digital setting for V/F separation	Default	0V
	Setting Range	0V~F2.02	

When the voltage source is digital setting, this value is directly used as the target value of the output voltage.

F4.14	Voltage rise time of separation	Default	0.0s
	Setting Range	0.0s~1000.0s	

VF separation rise time refers to the time required for the output voltage to change from 0V to the rated voltage of the motor.

As Figure 6-8:

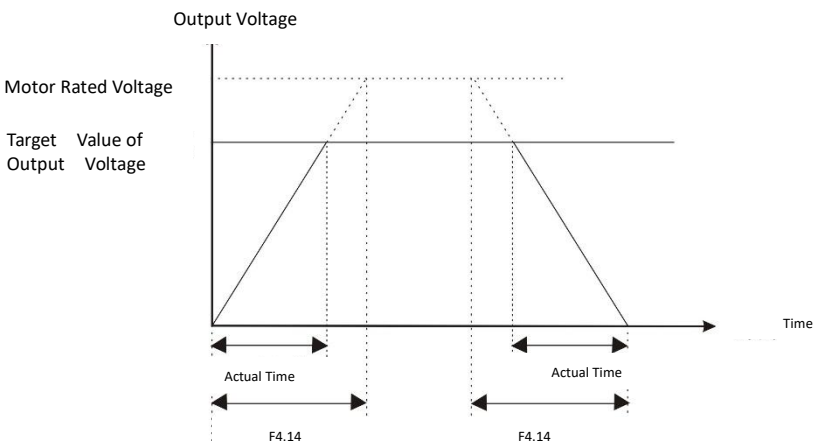

Figure 6-8 Schematic diagram of V/F separation

F4.16	Auto voltage regulation (AVR)	Default	1
	Setting Range	0:Invalid 1:Only valid during deceleration 2:Only valid during acceleration	

		3:Valid

According to the actual use, select the situation where the AVR function is enabled.

F5 GROUP INPUT TERMINALS

The standard unit of the VB series inverter has 6 multi-function digital input terminals (where DI6 can be used as a high-speed pulse input terminal) and 2 analog input terminals.

F5.00	DI1 terminal function selection	Default	1（Forward Running）
F5.01	DI2 terminal function selection	Default	2（Reverse Running）
F5.02	DI3 terminal function selection	Default	9（Reset Faults）
F5.03	DI4 terminal function selection	Default	12（Multi-speed instruction terminal 1）
F5.04	DI5 terminal function selection	Default	13（Multi-speed instruction terminal 2）
F5.05	DI6 terminal function selection	Default	0
F5.06~F5.09	Reserved		
F5.10	VDI terminal function selection	Default	0

These parameters are used to set the corresponding function of the digital multi-function input terminals

Set Value	Function	Description
0	No function	The AC drive will not operate even if a signal is input. The unused terminals can be set to have no function to prevent malfunction.
1	Forward Running（FWD）	Control the forward and reverse rotation of the inverter through external terminals.
2	Reverse Running（REV）	

Set Value	Function	Description
3	Three-wire operation control	Use this terminal to determine that the inverter operating mode is three-wire control mode. For details, please refer to F5.16 three-wire control mode function code introduction.
4	Forward point movement （FJOG）	FJOG is jog forward running, RJOG is jog reverse running. Refer to the detailed description of F8.00, F8.01, F8.02 function codes for frequency and jog acceleration/deceleration time during jog operation.
5	Reverse point movement（RJOG）	
6	Terminal UP	When the frequency is given by the external terminal, modify the frequency increase command and decrease command. When the frequency source is set to digital setting, the set frequency can be adjusted up and down.
7	Terminal DOWN	
8	Free stopping	The inverter blocks the output, and the motor stopping process is not controlled by the inverter. For large inertia loads and when there is no requirement for stopping time, the method is often adopted. This method has the same meaning as the free stop described in F1.10.
9	Reset Faults	External fault reset function. It has the same function as the RESET key on the keyboard. Use this function to realize remote fault reset.
10	Run pause	The inverter decelerates to stop, but all operating parameters are in the memory state. Such as PLC parameters, swing frequency parameters, PID parameters. After this signal disappears, the inverter will resume running to the state before stopping.
11	External faults normally open input	After the external fault signal is sent to the inverter, the inverter reports a fault and handles it according to the fault protection action mode (FA.13~FA.16).
12	Multi-speed instruction terminal 1	A total of 16-speed settings can be achieved through the digital state combination of these four terminals. See attached sheet 1 for detailed combination.
13	Multi-speed instruction terminal 2	
14	Multi-speed instruction terminal 3	
15	Multi-speed	

Set Value	Function	Description
	instruction terminal 4	
16	Terminal 1 for acceleration/deceleration time selection	Four types of acceleration and deceleration time can be selected through the combination of the digital states of these two terminals. See attached sheet 2 for detailed combination.
17	Terminal 2 for acceleration/deceleration time selection	
18	Frequency source switchover（terminal and keypad）	When the frequency source selection (F0.07 ones place) is set to 2, the main frequency source X and auxiliary frequency source Y are switched through this terminal. When the frequency source selection (F0.07 ones place) is set to 3, this terminal is used to switch between the main frequency source X and the main and auxiliary calculation results. When the frequency source selection (F0.07 ones place) is set to 4, use this terminal to switch between the auxiliary frequency source Y and the main and auxiliary calculation results
19	UP/DOWN setting clear（terminal and keypad）	When the frequency source is a digital frequency setting, this terminal can be used to clear the frequency value changed by UP/DOWN and restore the reference frequency to the value set by F0.08.
20	Command source switchover terminal	When the command source (F0.01) is set to 1, this terminal can be used to switch between terminal control and keyboard control. When the command source (F0.01) is set to 2, the communication control and keyboard control can be switched through this terminal.
21	Acceleration/deceleration prohibited	Ensure that the inverter is not affected by external signals (except for the stop command) and maintain the current output frequency.
22	PID pause	PID is temporarily invalid and the inverter maintains the current frequency output.
23	PLC status reset	The PLC pauses during execution, and can be restored to the initial state of the simple PLC through this terminal when it is running again.
24	Swing pause	The inverter outputs at the central frequency. The swing frequency is

Set Value	Function	Description
		paused.
25	Counter input	The input terminal for counting pulses.
26	Counter reset	Clear the counter status.
27	Length count input	The input terminal for length count.
28	Length reset	Clear the length.
29	Torque control prohibited	The inverter is prohibited from torque control mode.
30	Pulse input (only valid for DI6)	Pulse input terminal（Reserved）
31	Reserved	
32	Immediate DC braking	When this terminal is valid, the inverter directly switches to the DC braking state
33	External faults normally closed input	When the external fault signal is sent to the inverter, the inverter reports a fault and stops.
34	Frequency setting effect terminal	If the function of this terminal is set, when the frequency is modified, the effective time of the modification is controlled by this terminal
35	Reverse PID action direction	If this terminal is valid, the PID action direction is opposite to the direction set by F9.03
36	External stop terminal 1	During keyboard control, this terminal can be used to stop, which is equivalent to the STOP key on the keypad
37	Command source switchover terminal 1	Used to switch between terminal control and communication control. When this terminal is valid if F0.02 is set to terminal control, it will switch to communication control; if F0.02 is set to communication control, it will switch to terminal control.
38	PID integral pause	If this terminal is valid, the PID integral function is suspended, but the proportional regulation and differential regulation still function.
39	Frequency source X and preset frequency switchover terminals	If this terminal is valid, the frequency source X is replaced by the preset frequency (F0.08)
40	Frequency source Y	If this terminal is valid, the frequency source Y is replaced by the

Set Value	Function	Description
	and preset frequency switchover terminals	preset frequency (F0.08)
41	Reserved	
42	Reserved	
43	PID parameter switchover terminal	When F9.18 (PID parameter switching condition) is DI terminal, when this terminal is valid, PID uses F9.15~F9.17 parameters. When the terminal is invalid, use F9.05~F9.07 parameters
44	User-defined fault 1	After the external fault signal is sent to the inverter, the inverter reports a fault and handles it according to the fault protection action mode (FA.13~FA.16).
45	User-defined fault 2	After the external fault signal is sent to the inverter, the inverter reports a fault and handles it according to the fault protection action mode (FA.13~FA.16).
46	Speed control/torque control switchover	Switch the inverter to run in torque control or speed control mode. If this terminal is invalid, it runs in the mode defined by F3.09 (speed/torque control mode), and if it is valid, it switches to the other mode.
47	Emergency stop	If this terminal is valid, the inverter will stop at the fastest speed
48	External stopping terminal 22	Under any control mode, this terminal can be used to stop, and stop according to deceleration time 4
49	Deceleration DC braking	If this terminal is valid, the inverter will first decelerate to the start frequency of stop DC braking and then switch to DC braking state
50	Clear the current running time	If this terminal is valid, the inverter's current running timing time will be cleared, and this function will be used for timing running (F8.42).

Attached sheet: Multi-speed function description

K4	K3	K2	K1	Set Frequency	Related Parameter
OFF	OFF	OFF	OFF	Multistage	FD.00

				Speed0	
OFF	OFF	OFF	ON	Multistage Speed1	FD.01
OFF	OFF	ON	OFF	Multistage Speed2	FD.02
OFF	OFF	ON	ON	Multistage Speed3	FD.03
OFF	ON	OFF	OFF	Multistage Speed4	FD.04
OFF	ON	OFF	ON	Multistage Speed5	FD.05
OFF	ON	ON	OFF	Multistage Speed6	FD.06
OFF	ON	ON	ON	Multistage Speed7	FD.07
ON	OFF	OFF	OFF	Multistage Speed8	FD.08
ON	OFF	OFF	ON	Multistage Speed9	FD.09
ON	OFF	ON	OFF	Multistage Speed10	FD.10
ON	OFF	ON	ON	Multistage Speed11	FD.11
ON	ON	OFF	OFF	Multistage Speed12	FD.12
ON	ON	OFF	ON	Multistage Speed13	FD.13
ON	ON	ON	OFF	Multistage Speed14	FD.14
ON	ON	ON	ON	Multistage Speed15	FD.15

Attached sheet: description of acceleration and deceleration time selection

Terminal 2	Terminal 1	Selection of acceleration/deceleration time	Related Parameter
OFF	OFF	Acceleration/Deceleration Time1	F0.18. F0.19
OFF	ON	Acceleration/Deceleration Time2	F8.03. F8.04
ON	OFF	Acceleration/Deceleration Time3	F8.05. F8.06
ON	ON	Acceleration/Deceleration Time4	F8.07. F8.08

F5.15	DI filter time	Default	0.010s
	Setting range	0.000s~1.000s	

Set the sensitivity of the DI terminal. If the digital input terminal is susceptible to interference and cause malfunction, you can increase this parameter to increase the anti-interference ability, but cause the sensitivity of the DI terminal to decrease.

F5.16	Terminal command mode		Default	0
	Setting range	0	Two-line mode 1	
		1	Two-line mode 2	
		2	Three-line mode 1	
		3	Three-line mode 2	

This parameter defines four different ways to control the operation of the inverter through external terminals.

0: Two-line mode 1: This mode is the most commonly used two-line mode. The FWD and REV terminal commands determine the forward and reverse of the motor.

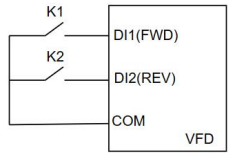

K1	K2	RUN COMMAND
0	0	STOP
1	0	FWD
0	1	REV
1	1	STOP

1: Two-wire mode 2: REV is the enable terminal when using this mode. The direction is determined by the state of the FWD.

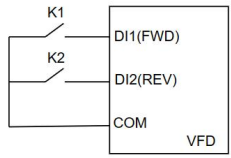

K1	K2	RUN COMMAND
0	0	STOP
1	0	FWD
1	1	REV
0	1	STOP

2: Three-line mode 1: This mode Din is the enable terminal, and the direction is controlled by FWD and REV respectively.

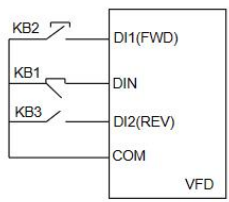

KB2	KB3	RUN COMMAND
0	0	STOP
0	1	REV
1	0	FWD
1	1	STOP

But the pulse is valid, it must be completed by disconnecting the Din terminal signal when stopping. Din is the multifunctional input terminal of DI1~DI6. At this time, the corresponding terminal function should be defined as the No. 3 function "three-wire operation control".

3: Three-line mode 2: The enable terminal of this mode is Din, the running command is given by FWD, and the direction is determined by the state of REV. The stop command is completed by disconnecting the Din signal.

Din is the multi-function input terminal of DI1~DI6. At this time, the corresponding terminal function should be defined as the No. 3 function "three-wire operation control".

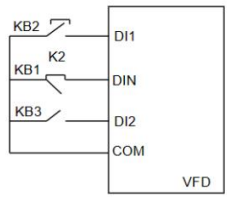

K2	K3	RUN COMMAND
0	0	STOP
1	0	FWD
1	1	REV
0	1	STOP

F5.17	UP/DOWN change rate range	Default	0.50Hz
	Setting range	0.01Hz~65.535Hz	

Frequency change rate while using terminal UP/DOWN function

F5.18	AI1 minimum input	Default	0.00V
	Setting range	0.00V~F5.15	
F5.19	Percentage rate of AI1 minimum input	Default	0.0%
	Setting range	-100.00%~100.0%	
F5.20	AI1 maximum input	Default	10.00V
	Setting range	F5.18~10.00V	
F5.21	Percentage rate of AI1 maximum input	Default	100.0%
	Setting range	-100.00%~100.0%	
F5.22	AI1 filter time	Default	0.10s
	Setting range	0.00s~10.00s	

The above function code defines the relationship between the analog input voltage and the set value represented by the analog input. When the analog input voltage exceeds the set maximum input range, the other part will be calculated as the maximum input. When the analog input voltage exceeds the set minimum input The range, the outside part will be calculated based on the AI minimum input.

When analog input is current input, 1mA current is equivalent to 0.5V voltage. In different applications, the nominal value corresponding to 100% of the analog setting is different. For details, please refer to

the description of each application part.

The following figures illustrate several settings:

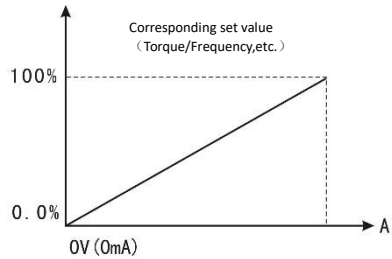

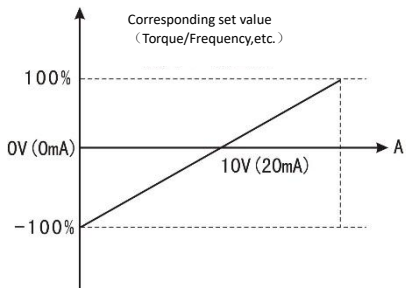

Figure 6-9 Correspondence between analog reference and setting

F5.23	AI2 minimum input	Default	0.00V
	Setting range	0.00V~F5.25	
F5.24	Percentage rate of AI2 minimum input	Default	0.0%
	Setting range	-100.00%~100.0%	
F5.25	AI2 maximum input	Default	10.00V
	Setting range	F5.23~10.00V	
F5.26	Percentage rate of AI2 maximum input	Default	100.0%
	Setting range	-100.00%~100.0%	
F5.27	AI2 filter time	Default	0.10s
	Setting range	0.00s~10.00s	

The function of AI2 is similar to the setting method of AI1.

F5.33	DI1 enable delay time	Default	0.0s
	Setting range	0.0s~3600.0s	
F5.34	DI1 disable delay time	Default	0.0s
	Setting range	0.0s~3600.0s	
F5.35	DI2 enable delay time	Default	0.0s
	Setting range	0.0s~3600.0s	
F5.36	DI2 disable delay time	Default	0.0s
	Setting range	0.0s~3600.0s	

Set the delay time from DI terminal status change to inverter response.

Currently only DI1\DI2 has the function of setting the delay time.

F5.37	DI valid mode selection 1		Default	00000
	Setting range	Ones Place	DI1 terminal valid state setting	
		0	High level	
		1	Low Level	
		Tens Place	DI2 terminal valid state setting（0~1,as above）	
		Hundreds Place	DI3 terminal valid state setting（0~1,as above）	
		Thousands Place	DI4 terminal valid state setting（0~1,as above）	
		Ten Thousands Place	DI5 terminal valid state setting（0~1,as above）	
F5.38	DI valid mode selection 2		Default	00000
	Setting range	Ones Place	DI6 terminal valid state setting	
		0	High level	
		1	Low Level	

		Tens Place	Reserved
		Hundreds Place	Reserved
		Thousands Place	Reserved
		Ten Thousands Place	Reserved

Define the effective state setting of the input terminal.

High level:The connection between DI terminal and COM is valid, while disconnection is invalid.

Low Level:The connection between DI terminal and COM is invalid, while disconnection is valid.

F6 GROUP OUTPUT TERMINALS

The standard unit of VB series inverter has 2 multi-function relay output terminals, 1 FM terminal (can be used as high-speed pulse output terminal or open collector output), 2 multi-function analog output terminals.

F6.00	FM terminal output mode		Default	1
	Setting range	0	Pulse Output（FMP）（Reserved）	
		1	Open-collector output（FMR）	

The FM terminal is a programmable multiplexing terminal. It can be used as a high-speed pulse output terminal (FMP), the maximum pulse frequency is 100kHz. FMP related functions see F6.06. It can also be used as an open collector output terminal (FMR). Refer to F6.01 for FMR function.

FMP function needs hardware support

F6.01	FMR function	Default	0
F6.02	Relay 1 function	Default	2
F6.03	Relay 2 function	Default	1
F6.06	VDO Output Selection	Default	0

The functions of the multi-function output terminals are as follows:

Set Value	Function	Description
0	No output	The output terminal has no function
1	AC Drive running	It means that the inverter is running and there is an output frequency (it can be zero) and the ON signal is output at this time.
2	Fault output(stop)	When the inverter fails and it stops, it outputs ON signal.
3	Frequency level detection FDT1 output	Please refer to the detailed description of function codes F8.08 and F8.09.
4	Frequency reached	Please refer to the detailed description of function codes F8.21
5	Zero-speed running(no output at stop)	The inverter runs and the output frequency is 0, and the ON signal is output.
6	Motor overload	Before the motor electronic thermal protection acts, it is

Set Value	Function	Description
	pre-warning	judged according to the overload forecast value, and the ON signal is output after the forecast value is exceeded. Motor overload parameters are set in FA.00~FA.02.
7	AC Drive overload pre-warning	After checking that the inverter is overloaded, advance 10s before the protection occurs. Output ON signal.
8	Set count value reached	When the count value reaches the value set by FB.08, the ON signal is output.
9	Designated count value reached	When the count value reaches the value set by FB.09, the ON signal is output. Refer to the function description of FB group for counting function
10	Length reached	When the actual length detected exceeds the length set by FB.05, the ON signal is output.
11	PLC cycle complete	When the simple PLC runs a cycle, it outputs a pulse signal with a width of 250ms.
12	Accumulative running time reached	When the accumulative running time of the inverter exceeds the time set by F8.17, it outputs ON signal.
13	Frequency limited	When the set frequency exceeds the upper and lower frequency limits and the inverter output frequency reaches the upper and lower frequency limits, the ON signal is output.
14	Torque limited	When the torque limit function is activated, the stall protection function automatically activates, automatically changes the output frequency, and outputs an ON signal to indicate that the output torque is limited. This output signal can be used to reduce the load or display an overload status signal on the monitoring device.
15	Ready for running	The power supply of the main circuit and control circuit is established, the protection function of the inverter does not operate, and the inverter outputs ON signal when it is in an operational state.
16	AI1 larger than AI2	When the value of analog input AI1 is greater than the

Set Value	Function	Description
		other input AI2, the ON signal is output.
17	Frequency upper limit reached	When the operating frequency reaches the upper limit frequency, the ON signal is output.
18	Frequency lower limit reached	When the operating frequency reaches the lower limit frequency, the ON signal is output.
19	Undervoltage state output	When the inverter is under voltage, it outputs ON signal.
20	Communication setting	See the relevant description in the communication protocol.
21	Positioning completed (Reserved)	Reserved
22	Positioning close (Reserved)	Reserved
23	Zero-speed running 2 （ having output at stop）	When the output frequency of the inverter is 0, the ON signal is output (also output when stopping).
24	Accumulative power-on time reached	When F7.13 (accumulated power-on time of the inverter) exceeds the time set by F8.16, the ON signal is output.
25	Frequency level detection FDT2	Please refer to the detailed description of function codes F8.28 and F8.39.
26	Frequency 1 reached	Please refer to the detailed description of function codes F8.30 and F8.31.
27	Frequency 2 reached	Please refer to the detailed description of function codes F8.32 and F8.33.
28	Current 1 reached	Please refer to the detailed description of function codes F8.38 and F8.30.
29	Current 2 reached	Please refer to the detailed description of function codes F8.40 and F8.41.
30	Timing reached	When F8.42 (timing function selection) is valid, the inverter will output ON signal when the current running time reaches the set timing time.

Set Value	Function	Description
31	AI1 input limit exceeded	When the value of analog input AI1 is greater than F8.46 (AI1 input protection upper limit) or less than F8.45 (AI1 input protection lower limit), FM (FMR) outputs ON signal.
32	Offload	Output ON signal when the inverter is in the off-load state
33	Running direction	Output ON signal when inverter is running in reverse
34	Zero current detection	Please refer to the detailed description of function codes F8.34 and F8.35.
35	Module temperature reached	When F7.07 (IGBT module heatsink temperature) reaches the value of F8.47 (module temperature reached), output ON signal
36	Software overcurrent output	Please refer to the detailed description of function codes F8.36 and F8.37.
37	Lower limit frequency reached (non-operational)	When the running frequency reaches the lower limit frequency, the ON signal is output (also output when stopping).
38	Fault output (continue operation)	When the inverter fails, output ON signal
39	Reserved	
40	This running time arrive	
41	User-defined output 1	The user can define the conditions for the output terminal to output, see F6.28~F6.32 for details.
42	User-defined output 2	The user can define the conditions for the output terminal to output, see F6.23~F6.37 for details.

F6.11	FMP（Pulse output terminal）output selection（Reserved）	Default	0
F6.12	AO1 function	Default	0
F6.13	AO2 function	Default	1

The standard output of analog output (zero offset is 0, gain is 1) is 0mA~20mA (or 0V~10V), and the FMP output range is from 0Hz to the setting of function code F5.09.

The range of the corresponding amount expressed is shown in the following Sheet:

Set value	Function	Range
0	Running frequency	0~Maximum output power
1	Set frequency	0~Maximum output frequency
2	Output current	0~2 times motor rated current
3	Output torque	0~2 times motor rated torque
4	Output power	0~2 times motor rated power
5	Output voltage	0~1.2 times AC drive rated voltage
6	PULSE input	0.01kHz~100.00kHz
7	AI1	0V~10V
8	AI2	0V~10V/0~20mA
10	Length	0~Maximum set length
11	Count value	0~Maximum count value
12	Communication setting	-10000~10000
13	Motor Speed	0~Rotation speed corresponding to maximum output frequency
14	Output Current	0-1000A,as 0-10V 0-1000V,as 0-10V
15	Output Voltage	0.0V~1000.0V

F6.14	FMP output maximum frequency	Default	50.00kHz
	Setting range	0.01kHz~100.00kHz	

When the FM terminal is selected as pulse output, the maximum frequency value of the pulse can be output.

F6.15	AO1 offset coefficient	Default	0.0%
	Setting range	-100.0%~100.0%	
F6.16	AO1 gain	Default	1.00
	Setting range	-10.00~10.00	

F6.17	AO2 offset coefficient	Default	0.00%
	Setting range	-100.0%~100.0%	
F6.18	AO2 gain	Default	1.00
	Setting range	-10.00~10.00	

If the zero offset is represented by "b", the gain is represented by k, the actual output is represented by Y, and the standard output is represented by X, the actual output is Y=kX+b; AO1, A02 zero offset coefficient 100% corresponds to 10V (20mA). Standard output refers to the output 0V~10V (20mA) corresponding to the analog output representing 0~max. Generally used to correct the zero drift of analog output and the deviation of output amplitude. It can also be customized to any desired output curve: For example: if the analog output content is the operating frequency, and hope to output 8V (16mA) when the frequency is 0, and 3V (6mA) when the frequency is the maximum frequency, the gain should be set to " .0.50", the zero offset should be set to "80%".

F6.19	FMR connecting delay time	Default	0.0s
	Setting range	0.0s~3600.0s	
F6.20	RELAY1 connecting delay time	Default	0.0s
	Setting range	0.0s~3600.0s	
F6.21	RELAY2 connecting delay time	Default	0.0s
	Setting range	0.0s~3600.0s	
F6.22	VDO connecting delay time	Default	0.0s
	Setting range	0.0s~3600.0s	
F6.23	FMR disconnecting delay time	Default	0.0s
	Setting range	0.0s~3600.0s	
F6.24	RELAY1 disconnecting delay time	Default	0.0s
	Setting range	0.0s~3600.0s	
F6.25	RELAY2 disconnecting delay time	Default	0.0s
	Setting range	0.0s~3600.0s	

F6.26	VDO disconnecting delay time	Default	0.0s
	Setting range	0.0s~3600.0s	

Set the delay time from the state change of the output terminal FMR, relay 1, relay 2, VDO to the output change.

F6.27	Output terminal valid state selection	Default	00000
	Setting range	Ones Place	FMR valid state selection
		0	Positive Logic
		1	Negative Logic
		Tens Place	RELAY1 valid state selection（0~1,as above）
		Hundreds Place	RELAY2 valid state selection（0~1,as above）
		Thousands Place	Reserved
		Ten Thousands Place	Reserved

Define the positive and negative logic of output terminal FMR, relay 1, and relay 2.

Positive logic: the digital output terminal is valid when connected to the corresponding common terminal, but invalid when disconnected;

Inverse logic: the connection between the digital output terminal and the corresponding common terminal is invalid, and the disconnection is valid;

F6.28	User defined output variability selection (EX)1	Default	00
	Setting range	0~49	

This parameter is used to select the reference variable for custom output. Use the selected variable EX as the comparison object

F6.29	User defined comparison method 1	Default	00
	Setting range	0~14	

The ones place selection comparison test mode, the variable selected by F6.28 is used as the comparison test object, and the comparison and test values are set by F6.31~F6.32.

Tens place selects the output mode. False value output means output if the condition is not met, and no output if the condition is met; true value output means output if the condition is met, and no output if the condition is not met.

F6.30	User defined output dead zone 1	Default	0
	Setting range	0~65535	

When the comparison test mode of F6.29 is set to be greater than or equal to or less than or equal to, F6.30 is used to define the processing dead zone value centered on the comparison value X1, and the processing dead zone is only for 1 and 2 of the F6.29 comparison test mode It has an effect, but no effect on 0, 3, and 4. For example, when F6.29 is set to 11, when EX increases from 0 upwards, the output is valid after increasing to greater than or equal to X1+F6.30; when EX decreases downward, after decreasing to less than or equal to X1.F6.30, The output is invalid.

F6.31	User-defined 1 output comparison value X1	Default	0
	Setting range	0~65535	
F6.32	User-defined 1 output comparison value X2	Default	0
	Setting range	0~65535	

These two parameters are used to set the comparison value of the custom output.

The following is an example of using custom output:

When the set frequency is greater than or equal to 20.00HZ, the relay is closed;

The setting parameters are as follows: F6.02 = 41, F6.28 = 1, F6.29 = 11, F6.30 = 0, F6.31 = 2000;

2. The relay is required to close when the bus voltage is less than or equal to 500.0V; in order to avoid frequent relay actions when the detection voltage is 5.0V up and down from 500.0V, it is required to be treated as a dead zone in the range of (500.0-5.0) ~ (500.0+5.0) .

The setting parameters are as follows: F6.02 = 41, F6.28 = 2, F6.29 = 01, F6.30 = 50, F6.31 = 5000;

When the inverter is required to reverse, the relay is closed:

The setting parameters are as follows: F6.02 = 41, F6.28 = 5, F6.29 = 14, F6.31 = 8, F6.32 = 8;

When AI1 input is required to be greater than 3.00V and less than or equal to 6.00V, the relay is closed:

The setting parameters are as follows: F6.02 = 41, F6.28 = 13, F6.29 = 13, F6.31 = 300, F6.32 = 600;

F6.33	User defined output variability selection (EX)2	Default	00
	Setting range	0~49	

F6.34	User defined comparison method 2	Default	00
	Setting range	0~14	

F6.35	User defined output dead zone 1	Default	0
	Setting range	0~65535	

F6.36	User-defined 2 output comparison value X1	Default	0
	Setting range	0~65535	
F6.37	User-defined 2output comparison value X2	Default	0
	Setting range	0~65535	

For the second output, the parameter setting method is the same as F6.28~F6.32.

F6.38	The setting time of timer	Default	0
	Setting range	0.00s～100.00s	

Set the timer setting time

F7 GROUP KEYPAD DISPLAY

F7.00	LCD keypad parameter copy		Default	0
	Setting range	0	No operation	
		1	Upload local functional parameters to LCD keypad	
		2	Download functional parameters from LCD keypad to AC drive	

Note: This function only supports LCD keyboard

F7.01	MF.K key function selection		Default	0
	Setting range	0	MF.K disabled	
		1	Switchover between keypad control and remote command control(terminal or communication)	
		2	Switchover between forward rotation and reverse rotation	
		3	Forward JOG	
		4	Reverse JOG	
		5	Menu mode switching	

The MF.K key is the multi-function key. The function of the keyboard MF.K key can be defined through parameter settings. This key can be used to switch during stop and running.

0: When set to 0, this key has no function.

1: Switchover between keypad control and remote command control(terminal or communication). Refers to the switch of the command source, from the current command source to keyboard control (local operation). If the current command source is keyboard control, this command has no effect.

2: Switchover between forward rotation and reverse rotation

Switch the direction of the frequency command through the keyboard MF.K key. It is valid only in the operation panel command channel.

3: Forward jog

Realize forward jog (FJOG) by keyboard MF.K key.

4: Reverse jog

Reverse jog (RJOG) can be realized by keyboard MF.K key.

5: Menu mode switching

The menu mode switch is realized through the keyboard MF.K key.

F7.02	STOP/RESET key function		Default	1
	Setting range	0	STOP/RESET key enabled only in keypad control	
		1	STOP/RESET key enabled in any operation mode	
F7.03	LED display parameters 1 while running		Default	17
	Setting range	0000~FFFF	Bit00: Running frequency (Hz) Bit01: Set frequency (Hz) Bit02: DC bus voltage (V) Bit03: Output voltage (V) Bit04: Output current (A) Bit05: Output power (kW) Bit06: Output torque (%) Bit07: DI input status Bit08: DO output status Bit09: AI1 power (V) Bit10: AI2 power (V) Bit11: Reserved Bit12: Count value Bit13: Length value Bit14: Load speed display Bit15: PID set value If you need to display the above parameters while running, set the corresponding digit to 1, convert this binary number to hexadecimal and set it to F7.03.	
F7.04	LED display parameters 2 while running		Default	0
	Setting range	0000~FFFF	Bit00: PID feedback Bit01: PLC stage Bit02: Feedback speed (0.1Hz) Bit03: Reserved Bit04: Remaining running time	

	n ge		Bit05: AI1 voltage before correction Bit06: AI2 voltage before correction Bit07: Reserved Bit08: Linear speed Bit09: Current power-on time Bit10: Current running time Bit11: Reserved Bit12: Communication setting Bit13: Reserved Bit14: Main frequency X display Bit15: Auxiliary frequency Y display If you need to display the above parameters while running, set the corresponding digit to 1, convert this binary number to hexadecimal and set it to F7.04

The running display parameters are used to set the status parameters that can be viewed when the inverter is running. Up to 32 state parameters can be viewed. Select the state parameters to be displayed according to the digits of the parameter values of F7.03 and F7.04, and the display sequence starts from the lowest bit of F7.03.

F7.05	LED display parameters while stopping		Default	33
	Setting range	0000~FFFF	Bit00: Set frequency (Hz) Bit01: DC bus voltage(V) Bit02: DI input status Bit03: DO output status Bit04: AI1 voltage (V) Bit05: AI2 voltage (V) Bit06: Reserved Bit07: Count value Bit08: Length value Bit09: PLC stage Bit10: Load speed display	

			Bit11: PID set value Bit12: Reserved Bit13: PID feedback value If you need to display the above parameters while stopping, set the corresponding digit to 1, convert this binary number to hexadecimal and set it to F7.05	
F7.06	Load speed display coefficien		Default	1.0000
	Setting range		0.0001~6.5000	

Correspond the output frequency of the inverter to the load speed through this parameter. Set when you need to display the load speed.

The specific calculation method is described in F7.12.

F7.07	Heatsink temperature of IGBT	Default	0
	Setting range	0.0℃~100.0℃	

Displays the temperature of the IGBT module. The over-temperature protection value of IGBT module of different models may be different.

F7.08	Heatsink temperature of rectifier bridge	Default	0
	Setting range	0.0℃~100.0℃	

Displays the temperature of the rectifier bridge. The over-temperature protection value of rectifier bridge of different models may be different.

F7.09	Accumulative running time	Default	0h
	Setting range	0h~65535h	

Display the cumulative running time of the inverter so far. When this time reaches the set running time (F8.17), the multi-function digital output (12) of the inverter will act.

F7.10	Product Number	Default	-
	Setting range	Product Number of AC Drive	

F7.11	Software Version		Default	
	Setting range		Software Version of Control Board	
F7.12	Number of decimal places for load speed display		Default	0
	Setting range	0	0 decimal places	
		1	1 decimal places	
		2	2 decimal places	
		3	3 decimal places	

The load speed calculation method is: if the load speed display coefficient is 2.000, the load speed decimal point position is 2: 2 decimal points.

When the inverter is running: if the running frequency is 40.00 Hz, 4000*2.000 = 8000, and 2 decimal points display, the load speed is 80.00.

When the inverter is stopped: If the set frequency is 50.00 Hz, 5000*2.000 = 10000, and the load speed is 100.00 when displayed with 2 decimal points.

F7.13	Accumulative power-on time	Default	0h
	Setting range	0h~65535h	

Display the cumulative power-on time of the inverter so far. When this time reaches the set power-on time (F8.17), the inverter's multi-function digital output (24) will act.

F7.14	Accumulative power consumption	Default	0
	Setting range	0~65535	

Displays the cumulative power consumption of the inverter so far.

F7.15	Performance software version	Default	-
	Setting range	-	

F8 GROUP AUXILIARY FUNCTIONS

F8.00	JOG running frequency	Default	2.00Hz
	Setting range	0.00Hz~F0.10	
F8.01	JOG acceleration time	Default	20.0s
	Setting range	0.0s~6500.0s	
F8.02	JOG deceleration time	Default	20.0s

	Setting range	0.0s~6500.0s

Define the given frequency and acceleration/deceleration time of the inverter during jog. The jog process starts and stops according to start mode 0 (F1.00, direct start) and stop mode 0 (F1.10, decelerate to stop).

Jog acceleration time refers to the time required for the inverter to accelerate from 0Hz to the maximum output frequency (F0.10).

Jog deceleration time refers to the time required for the inverter to decelerate from the maximum output frequency (F0.10) to 0Hz.

F8.03	Acceleration time2	Default	Model dependent
	Setting range	0. 0s~6500.0s	
F8.04	Deceleration time2	Default	Model dependent
	Setting range	0. 0s~6500.0s	
F8.05	Acceleration time3	Default	Model dependent
	Setting range	0. 0s~6500.0s	
F8.06	Deceleration time3	Default	Model dependent
	Setting range	0. 0s~6500.0s	
F8.07	Acceleration time4	Default	Model dependent
	Setting range	0. 0s~6500.0s	
F8.08	Deceleration time4	Default	Model dependent
	Setting range	0. 0s~6500.0s	

The acceleration and deceleration time can be selected from F0.18 and F0.19 and the above three types of acceleration and deceleration time. The meanings are the same, please refer to the relevant description of F0.18 and F0.19. The acceleration and deceleration time 1~4 during the operation of the inverter can be selected through different combinations of the multifunctional digital input terminal DI. Please refer to the function codes F5.01~F5.05.

F8.09	Jump frequency 1	Default	0.00Hz
	Setting range	0.00Hz~F0.10	
F8.10	Jump frequency 2	Default	0.00Hz
	Setting range	0.00 Hz~F0.10	
F8.11	Frequency jump amplitude	Default	0.01Hz
	Setting range	0.00~F0.10	

When the set frequency is within the jump frequency range, the actual running frequency will run at

the jump frequency boundary close to the set frequency. By setting the jump frequency, the inverter can avoid the mechanical resonance point of the load. This inverter can set two jumping frequency points. If both skip frequencies are set to 0, this function will not work.

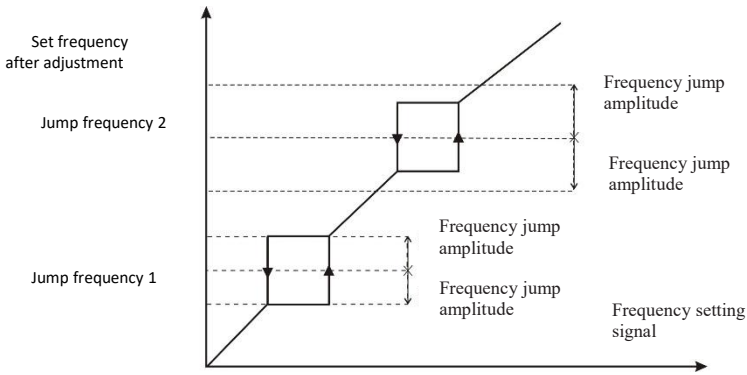

Figure 6-10 Schematic diagram of hopping frequency

F8.12	Forward/Reverse rotation dead-zone time	Default	0.0s
	Setting range	0.00s~3000.0s	

Set the transition time at the output zero frequency during the forward and reverse transition of the inverter, as shown in the figure below:

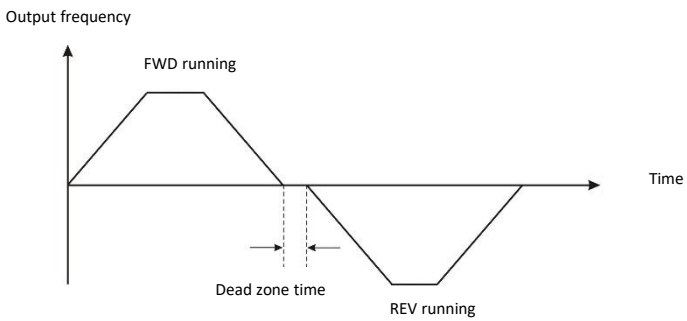

Figure 6-11 Schematic diagram of forward and reverse dead zone time

F8.13	Reverse control		Default	0
	Setting range	0	Enabled	

		1	Disabled

When this parameter is 0: it can be reverse controlled by keyboard, terminal or communication.

When this parameter is 1: the reverse control function is valid regardless of the command source selection, that is, the reverse control function is invalid under keyboard, terminal, and communication control.

F8.14	The carrier frequency is adjusted with temperature		Default	1
	Setting range	0	No	
		1	Yes	

Provide fixed and random PWM carrier frequency adjustment methods. Random PWM motor noise has a wide frequency domain, and fixed PWM motor noise frequency is fixed.

The carrier frequency temperature adjustment is effective, which means that the inverter can automatically adjust the carrier frequency according to its own temperature. Selecting this function can reduce the chance of inverter overheating alarm.

F8.15	Droop control	Default	0.00Hz
	Setting range	0.00Hz~10.00Hz	

When multiple inverters drive the same load, the load distribution is unbalanced due to different speeds, which makes the inverter with higher speed bear heavier load. The droop control characteristic is that the speed droops as the load increases, which can make the load balanced.

This parameter adjusts the frequency change of the inverter with drooping speed.

F8.16	Setting of accumulated power-on arrive time	Default	0h
	Setting range	0h~65000h	

Preset the power-on time of the inverter. When the accumulated power-on time (F7.13) reaches this set power-on time, the inverter's multi-function digital DO outputs a running time arrival signal.

F8.17	Setting of accumulated running arrive time	Default	0h
	Setting range	0h~65000h	

Pre-set the running time of the inverter. When the accumulated running time (F7.09) reaches this set running time, the inverter's multi-function digital DO outputs a running time arrival signal.

F8.18	Startup protection		Default	0
	Setting range	0	Invalid	
		1	Valid	

This function code is used to improve the safety protection coefficient. If it is set to 1, it has two effects: one is that if the running command exists when the inverter is powered on, the running command must be removed to eliminate the running protection status. The second is that if the running command still exists when the inverter fault is reset, the running command must be removed first to eliminate the running protection state. This can prevent the motor from running automatically without knowing it, causing danger.

F8.19	Frequency detection value (FDT1)	Default	50.00Hz
	Setting range	0.00Hz~F0.10	
F8.20	Frequency detection hysteresis (FDT1)	Default	5.0%
	Setting range	0.0%~100.0%（FDT1）	

Set the detection value of the output frequency and the hysteresis value of the output operation release.

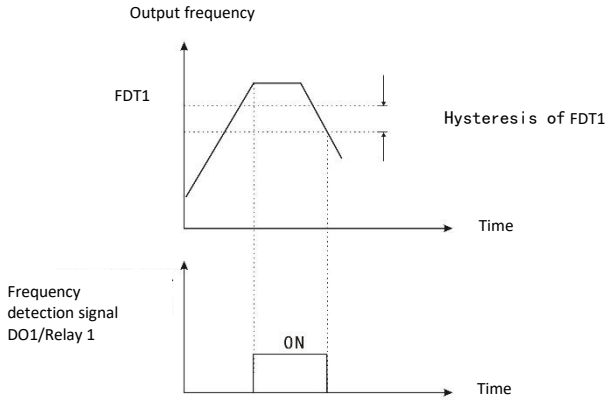

Figure 6-12 FDT1 level diagram

F8.21	Detection amplitude of frequency reached	Default	0.0%
	Setting range	0.00~100%*F0.10	

When the output frequency of the inverter reaches the set frequency value, this function can adjust its detection amplitude. As shown below:

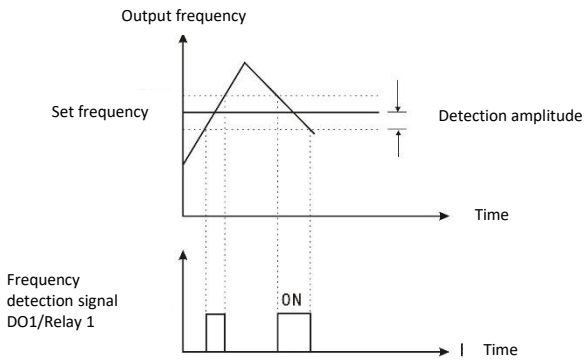

Figure 6-13 Schematic diagram of frequency arrival detection amplitude

F8.22	Jump frequency during	Default	0

	acceleration/deceleration			
	Setting range	0:Disabled 1:Enabled		

This function code is set to be valid. When the running frequency is within the jump frequency range, the actual running frequency will directly skip the set jump frequency boundary.

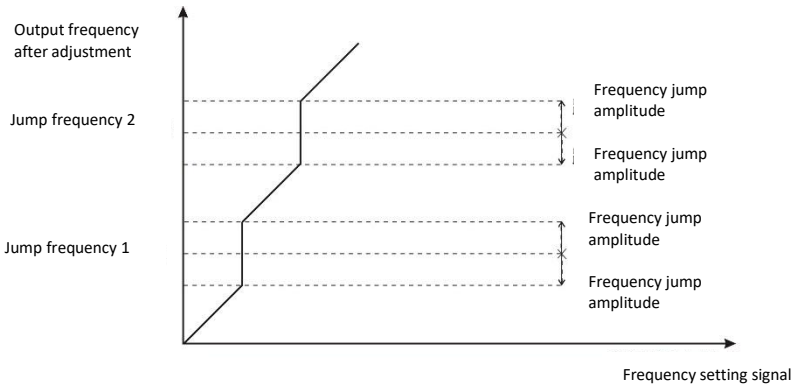

Figure 6-14 Schematic diagram of effective jumping frequency during acceleration and deceleration

F8.23	Accumulated running time arrive selection		Default	0
	Setting range	0:Keep running 1:Fault warning		
F8.24	Accumulated power-on time arrive action selection		Default	0
	Setting range	0:Keep running 1:Fault warning		

Set to 1: When the fault prompts, if the running time or power-on time arrives, according to the FA group fault protection action selection, the inverter will stop freely, decelerate to stop or continue to run (please refer to the function code FA.13~FA.16 for detailed description).

F8.25	Acceleration time 1/2 switching	Default	0.00Hz

	frequency point		
	Setting range	0.00Hz~F0.10	
F8.26	Deceleration time 1/2 switching frequency point	Default	0.00Hz
	Setting range	0.00Hz~F0.10	

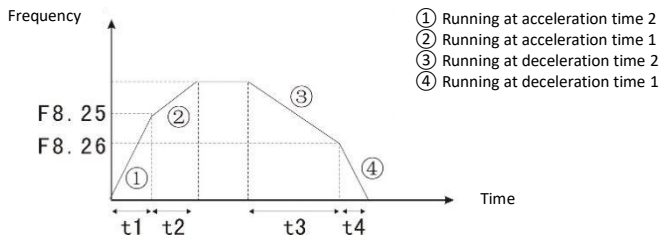

Figure 6-15 Schematic diagram of acceleration and deceleration time switching

■ Switchover selection during acceleration time

During acceleration, if the running frequency is less than F8.25 (acceleration time 1/2 switching frequency point), acceleration time 2 is selected, otherwise, acceleration time 1 is selected.

■ Switchover selection during deceleration time

During deceleration, if the running frequency is less than F8.26 (deceleration time 1/2 switching frequency point), deceleration time 2 is selected, otherwise, deceleration time 1 is selected.

F8.27	Terminal JOG preferred	Default	1
	Setting range	0:Disabled 1:Enabled	

This parameter is used to set the priority of terminal jog. When this parameter is set to be valid, once DI terminal receives the jog control command, the inverter will switch from other running states to terminal jog running state.

F8.28	Frequency detection value (FDT2)	Default	50.00Hz
	Setting range	0.00Hz~F0.10	
F8.29	Frequency detection hysteresis (FDT2)	Default	5.0%

	Setting range	0.0%~100.0%（FDT2）

The function of FDT2 is similar to the setting method of FDT1 (F8.19, F8.20).

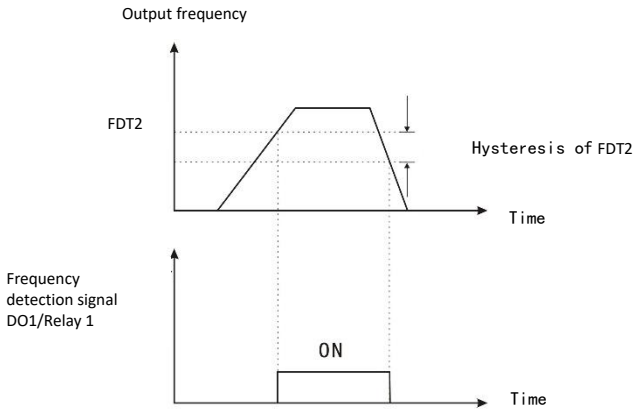

Figure 6-16 FDT2 level diagram

F8.30	Arbitrary frequency reaching detection value 1	Default	50.00Hz
	Setting range	0.00Hz~F0.10	
F8.31	Arbitrary frequency reaching detection amplitude 1	Default	0.0%
	Setting range	0.0%~100.0%（F0.10）	
F8.32	Arbitrary frequency reaching detection value 2	Default	50.00Hz
	Setting range	0.00Hz~F0.10	
F8.33	Arbitrary frequency reaching detection amplitude 2	Default	0.0%
	Setting range	0.0%~100.0%（F0.10）	

When the output frequency of the inverter is within the positive or negative detection range of the arbitrary arrival frequency detection value 1, 2, output pulse signal. As shown below:

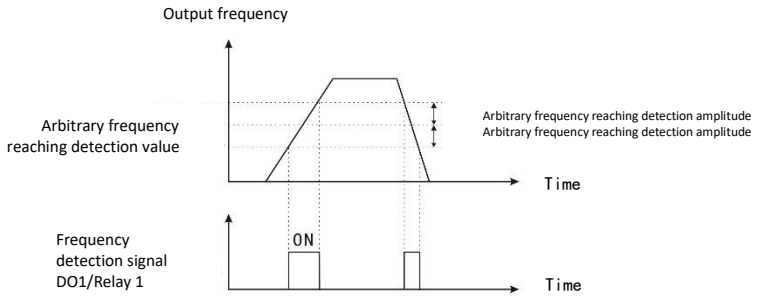

Figure 6-17 Schematic diagram of arbitrary reaching frequency detection

F8.34	Zero current detection level	Default	5.0%
	Setting range	0.0%~300.0%（Motor rated current）	
F8.35	Zero current detection delay time	Default	0.10s
	Setting range	0.00s~600.00s	

When the output current of the inverter is less than or equal to the zero current detection level and the duration exceeds the zero current detection delay time, a pulse signal is output. As shown below:

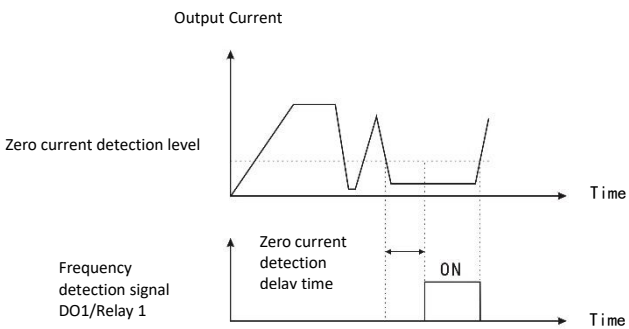

Figure 6-18 Schematic diagram of zero current detection

F8.36	Software overcurrent point	Default	200.0%
	Setting range	0.0%(Invalid)； 0.1%~300.0%（Motor rated current）	
F8.37	Software overcurrent detection delay time	Default	0.00s
	Setting range	0.00s~600.00s	

When the output current of the inverter is greater than or equal to the software overcurrent point and the duration exceeds the software overcurrent point detection delay time, a pulse signal is output. As shown below:

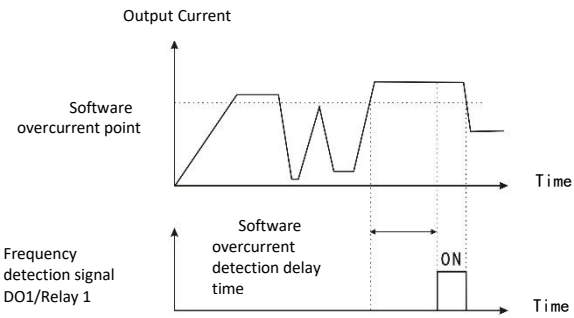

Figure 6-19 Schematic diagram of software overcurrent point detection

F8.38	Arbitrary reaching current 1	Default	100.0%
	Setting range	0.0%~300.0%（Motor rated current）	
F8.39	Arbitrary reaching current amplitude 1	Default	0.0%
	Setting range	0.0%~300.0%（Motor rated current）	
F8.40	Arbitrary reaching current 2	Default	100.0%
	Setting range	0.0%~300.0%（Motor rated current）	
F8.41	Arbitrary reaching current amplitude 2	Default	0.0%
	Setting range	0.0%~300.0%（Motor rated current）	

When the output current of the inverter is within the detection amplitude of the positive and negative

currents 1 and 2, it outputs a pulse signal. As shown below:

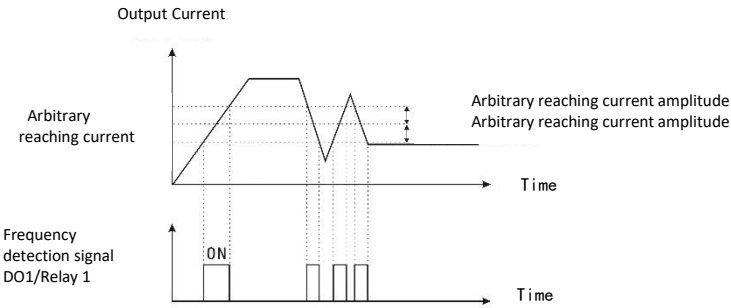

Figure 6-20 Schematic diagram of arbitrary reaching frequency detection

F8.42	Timing function		Default	0
	Setting range	0	Disabled	
		1	Enabled	
F8.43	Timing duration source		Default	0
	Setting range	0	F8.44 setting	
		1	AI1	
		2	AI2	
		3	Reserved	
F8.44	Timing duration		Default	0.0Min
	Setting range	0.0Min~6500.0Min		

This function is used to complete the timing operation of the inverter. When the F8.42 timing function selection is valid, the inverter is running timing. When the set timing running time is reached, the inverter stops and outputs pulse signals. The timer will be cleared next time it runs. The timing remaining running time can be viewed through D0.20.

The set timing running time is determined by F8.43 and F8.44.

F8.45	AI1 input voltage lower limit	Default	3.10V
	Setting range	0.00V~F8.46	
F8.46	AI1 input voltage upper limit	Default	6.80V
	Setting range	F8.45~10.00V	

When the value of analog input AI1 is greater than F8.46 (AI1 input protection upper limit) or less than

F8.47 (AI1 input protection lower limit), FM (FMR) outputs a pulse signal.

F8.47	IGBT temperature threshold		Default	75℃
	Setting range	0.00V~F8.46		

When F7.07 (IGBT module radiator temperature) reaches this value, output pulse signal

F8.48	Fast current limiting		Default	1
	Setting range	0	Disabled	
		1	Enabled	

Enabling the fast current limiting function can minimize the inverter's overcurrent fault and protect the inverter from uninterrupted operation. After entering the fast current-limiting state for a period of time, a fast current-limiting fault (Err40) will be reported, indicating that the inverter is overloaded. Please refer to the handling of Err10.

F9 GROUP PID FUNCTION OF PROCESS CONTROL

PID control is a common method used in process control. It adjusts the output frequency of the inverter by performing proportional, integral, and differential calculations on the difference between the feedback signal of the controlled quantity and the target quantity signal to form a negative feedback system. The controlled amount is stable at the target amount. It is suitable for process control such as flow control, pressure control and temperature control. The basic control block diagram is as follows:

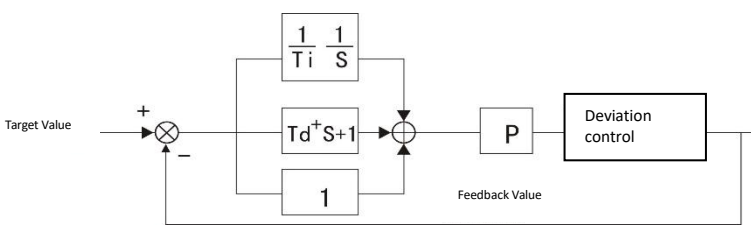

Figure 6-21 Block diagram of process PID principle

F9.00	PID setting source	Default	0

	PID setting source	0	F9.01
		1	AI1
		2	AI2
		3	Reserved
		4	PULSE setting(DI6)
		5	Communication setting
		6	Multi-speed instructions

When the frequency source selects PID, that is, if F0.03 or F0.04 is selected as 8, this group of functions will work. (Please refer to function code F0.03-F0.04). This parameter determines the target quantity given channel of the process PID. The set target value of the process PID is a relative value, and the set 100% corresponds to 100% of the feedback signal of the controlled system; the PID range (F9.04) is not necessary, because no matter how much the range is set, the system will It is calculated by relative value (0~100%). However, if the PID range is set, the actual value of the signal corresponding to the PID setting and feedback can be visually observed through the keyboard display parameters.

F9.01	PID digital setting	Default	50.0%
	Setting range	0.0%~100.0%	

When F9.00=0 is selected, the target source is keyboard setting. This parameter needs to be set. The reference value of this parameter is the feedback amount of the system.

F9.02	PID feedback source	Default	0
	Setting range	0	AI1
		1	AI2
		2	Reserved
		3	AI1－AI2
		4	PULSE setting（DI6）
		5	Communication setting
		6	AI1+AI2
		7	MAX(|AI1|,|AI2|)
		8	MIN (|AI1|,|AI2|)

Use this parameter to select the PID feedback channel.

F9.03	PID controlling direction	Default	0

	Setting range	0	Positive
		1	Negative

Positive effect: When the feedback signal is less than the PID setting, the inverter output frequency is required to increase in order to make the PID balance. Such as the tension PID control of winding.
Reverse effect: When the feedback signal is greater than the PID setting, the output frequency of the inverter is required to decrease in order to balance the PID. Such as unwinding tension PID control.
The effect of this function is affected by terminal function 35: PID direction.

F9.04	PID setting feedback range		Default	1000
	Setting range	0~65535	PID given feedback range is a dimensionless unit. Used as the display of PID given and feedback.	
F9.05	Proportional gain P1		Default	20.0
	Setting range	0.0~100.0		
F9.06	Integral time I1		Default	2.00s
	Setting range	0.01s~10.00s		
F9.07	Differential time D1		Default	0.000s
	Setting range	0.00~10.000		

Proportional gain P: determines the adjustment intensity of the entire PID regulator, the greater the P, the greater the adjustment intensity. The parameter of 100 means that when the deviation between the PID feedback amount and the given amount is 100%, the adjustment range of the PID regulator to the output frequency command is the maximum frequency (ignoring the integral effect and the derivative effect).
Integral time I: Decide how fast the PID regulator performs integral adjustment on the deviation between the PID feedback amount and the given amount. Integral time means that when the deviation between PID feedback quantity and given quantity is 100%, the integral regulator (ignoring proportional action and differential action) is continuously adjusted after this time, and the adjustment quantity reaches the maximum frequency (F0.09). The shorter the integration time, the greater the adjustment intensity.
Differential time D: determines the intensity of the PID regulator to adjust the rate of change of the deviation between the PID feedback quantity and the given quantity. Differential time means that if the feedback amount changes 100% within this time, the adjustment amount of the differential regulator is

the maximum frequency (F0.09) (ignoring proportional action and integral action). The longer the derivative time, the greater the adjustment intensity.

F9.08	PID reverse cut-off frequency		Default	0.00Hz
	Setting range	0. 00~F0.10		
F9.09	PID deviation limit		Default	0.01%
	Setting range		0. 0%~100.0%	

Deviation limit: When the PID feedback deviation is within this range, PID stops adjusting;

F9.10	PID differential limit range	Default	0.10%
	Setting range	0.00%~100.00%	
F9.11	PID setting change time	Default	0.00s
	Setting range	0.00s~650.00s	

PID given change time refers to the time required for the actual value of PID to change from 0.0% to 100.0%.

When the PID setting changes, the actual value of the PID setting will not respond immediately. Moreover, it changes linearly according to the given change time to prevent the given mutation from occurring.

F9.12	PID feedback filtering time	Default	0.00s
	Setting range	0.00s~60.00s	
F9.13	PID output filtering time	Default	0.00s
	Setting range	0.00s~60.00s	

Filter the PID feedback and output value to eliminate sudden changes.

F9.14	Proportional gain P2		Default	20.0
	Setting range	0.0~100.0		
F9.15	Integral time I2		Default	2.00s
	Setting range	0.01s~10.00s		
F9.16	Differential time D2		Default	0.000s
	Setting range	0.00~10.000		

The setting method is similar to F9.05, F9.06, F9.07. It is used in situations where PID parameter changes are required, see F9.18 introduction.

F9.17	PID parameter switchover condition		Default	0
	Setting range	0	No switchover	
		1	DI terminal	
		2	Automatic switchover based on deviation	
F9.18	PID parameter switchover deviation 1		Default	20.0%
	Setting range	0.0%~F9.20		
F9.19	PID parameter switchover deviation 2		Default	80.0%
	Setting range	F9.19~100.0%		

In some applications, a set of PID parameters may not satisfy the entire running process. At this time, multiple groups of PID parameters may need to be switched.

When not switching, the PID parameter is constant as parameter group 1.

When the DI terminal is switched, the multi-function terminal function selection is 43: When the PID parameter switching terminal and the terminal is valid, the parameter group 2 is selected, otherwise, the parameter group 1 is selected.

To switch automatically according to the deviation, when the deviation between the reference and the feedback is less than the PID parameter switching deviation 1 (F9.19), use F9.05, F9.06, F9.07 as the PID adjustment parameters, and the deviation between the reference and the feedback When it is greater than PID switching deviation 2 (F9.20), use F9.15, F9.16, and F9.17 as PID adjustment parameters. The PID parameters of the deviation segment between the switching deviation 1 and the switching deviation 2 are two sets of PID parameters linear switching.

F9.20	PID initial value	Default	0.0%
	Setting range	0.0%~100.0%	
F9.21	PID initial value holding time	Default	0.00s
	Setting range	0.00s~650.00s	

When PID is running, the inverter will first run with PID initial value (F9.21) given output and the duration is F9.22 (PID initial value holding time), and then start normal PID adjustment.

F9.22	Two output deviation forward maximum value	Default	1.00%.
	Setting range	0.00%~100.00%	
F9.23	Two output deviation reverse maximum value	Default	1.00%
	Setting range	0.00%~100.00%	

This function code is used to limit the difference between the two beats (2ms/beat) of the PID output, so as to prevent the PID output from changing too fast. F9.23 and F9.24 respectively correspond to the maximum output deviation during forward and reverse rotation.

F9.24	PID integral property		Default	00
	Setting range	Ones Place	Integration separation	
		0	Disabled	
		1	Enabled	
		Tens Place	Output to limit value	
		0	Continue the integral	
		1	Stop the integral	

Integration separation

When it is valid, if terminal function 22: integral pause is valid, the PID integral operation will stop. Only proportional and derivative are calculated.

Output to limit value

If it is to stop integration, when the PID output value reaches the maximum or minimum value, the PID integration stops calculating.

If it is continuous integration, the PID integration will be calculated at any time

F9.25	Detection value of PID feedback loss	Default	0.0%
	Setting range	0.0%:No judging feedback loss 0.1%~100.0%	

F9.26	Detection time of PID feedback loss		Default	0.0s
	Setting range	0.0s~20.0s		

This function code is used to judge whether PID feedback is lost. When the PID feedback is less than the feedback loss detection value (F9.26) and the duration reaches F9.27 (feedback loss detection time), the inverter reports a fault and runs according to the fault handling method.

F9.27	PID operation at stop		Default	0
	Setting range	0	No PID operation at stop	
		1	PID operation at stop	

F9.28	PID function selection		Default	0
	Setting range	0	Normal PID	
		1	Sleep PID	

0: The inverter runs under normal PID control and the sleep function is invalid.

1: The inverter runs under sleep PID control, and the sleep function is enabled.

F9.29	PID sleep threshold	Default	60.0%
	Setting range	0.0%~100.0%	
F9.30	PID sleep delay	Default	3.0s
	Setting range	0.0~3600s	
F9.31	PID wake-up threshold	Default	20.0%
	Setting range	0.0%~100.0%	
F9.32	PID wake-up time delay	Default	3.0s
	PID wake-up time delay	0.0~3600s	

When the sleep PID is selected, if the feedback is higher than the setting of F9.29 sleep threshold, the inverter will start the sleep timer. After the sleep delay time set by F9.30, if the feedback amount is still higher than the setting of F9.29 If the feedback is lower than the setting of the wake-up threshold of F9.31, the inverter will start the wake-up timer. After the time set by F9.32 wake-up delay, if the

feedback If it is still lower than the set value of F9.31 wake-up threshold, the wake-up is successful and PID control is performed. Refer to Figure 6-22 below to understand the relationship between the above parameters.

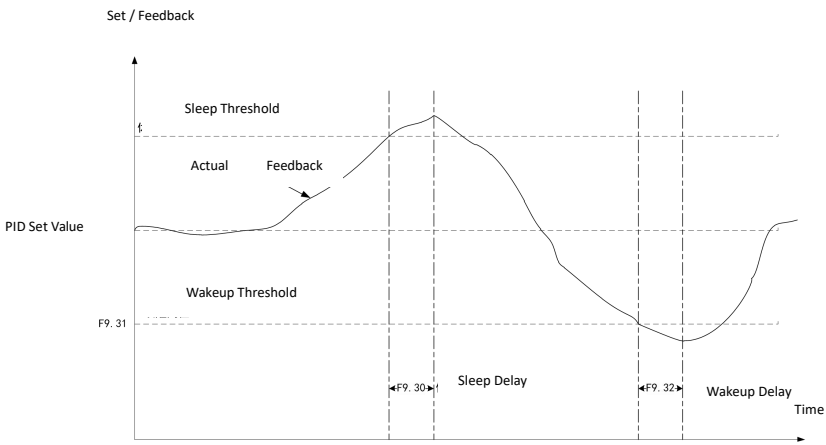

Figure 6-22 PID sleep and wake-up timing diagram

FA GROUP FAULTS & PROTECTION

FA.00	Motor overload protection selection	Default	1
	Setting range	0	Disabled
		1	Enabled

Choose 0: The inverter has no overload protection for the load motor, at this time the thermal relay shall be added in front of the motor;

Choose 1: At this time, the inverter has overload protection function for the motor. See FA.01 for protection value.

FA.01	Motor overload protection gain	Default	1.00
	Setting range	0.20~10.00	

Motor overload protection is an inverse time curve; 220%×(FA.01)×motor rated current for 1 minute, 150%×(FA.01)×motor rated current for 60 minutes.

FA.02	Motor overload warning coefficient	Default	80%
	Setting range	50%~100%	

The reference value of this value is the motor overload current. When the inverter detects that the output current reaches (FA.02) × motor overload current and continues for the specified time on the inverse time curve, it outputs a pre-alarm signal from DO or relay.

FA.03	Overvoltage stall gain	Default	10
	Setting range	0 （Invalid）~100	

Adjust the inverter's ability to suppress overvoltage stall. The larger the value, the stronger the ability to suppress overvoltage.

For loads with small inertia, this value should be small, otherwise the dynamic response of the system will slow down.

For loads with large inertia, this value should be large, otherwise the suppression effect is not good, and overvoltage faults may occur.

FA.04	Overvoltage stall protective voltage	Default	130%
	Setting range	120%~150%(3 phase)	

Select the protection point of the overvoltage stall function. When this value is exceeded, the inverter starts to perform the over-voltage stall protection function.

FA.05	Overcurrent stall gain	Default	Model dependent
	Setting range	0~100	

Adjust the inverter's ability to suppress excessive stall speed. The larger the value, the stronger the ability to suppress overcurrent.

For loads with small inertia, this value should be small, otherwise the dynamic response of the system will slow down.

For loads with large inertia, this value should be large, otherwise the suppression effect is not good, and overcurrent faults may occur.

FA.06	Overvoltage stall protective current	Default	150%
	Setting range	100%~200%	

Select the current protection point for the over-current stall function. When this value is exceeded, the inverter starts to perform the overcurrent stall protection function.

FA.07	Short-circuit to ground upon power-on		Default	1
	Setting range	0	Disabled	
		1	Enabled	

The inverter can be selected to detect whether the motor has a ground protection short-circuit fault when the inverter is powered on. If this function is valid, the inverter will output for a short time at the moment of power-on.

FA.08	Fault auto reset times	Default	0
	Setting range	0~5	

When the inverter selects automatic fault reset, it is used to set the number of times that can be reset automatically. If the value exceeds this value, the inverter will be on standby and waiting for repair.

FA.09	Relay action during fault auto reset	Default	0
	Setting range	0:Disabled； 1:Enabled	

After selecting the inverter fault automatic reset function, during the execution of the fault reset, through this parameter setting, you can decide whether the fault relay is required to act, so as to shield the fault alarm caused by this and make the equipment continue to run.

FA.10	Time interval of fault auto reset	Default	1.0s
	Setting range	0.1s~100.0s	

The waiting time for the inverter from the fault alarm to the automatic reset of the fault.

FA.11	Input phase loss protection	Default	Model dependent
	Setting range	0:Disabled 1:Enabled	

Choose whether to protect the input phase loss.

FA.12	Output phase loss protection	Default	1
	Setting range	0:Disabled 1:Enabled	

Choose whether to protect the output phase loss.

FA.13	Fault protection action selection 1		Default: 00000
	Setting range	Ones Place	Motor Overload(Err11)
		0	Free stopping
		1	Stop according to the stop mode
		2	Continue to run
		Tens Place	Input Phase Loss(Err12) (0~2,as ones place)
		Hundr-eds Place	Output Phase Loss (Err13) (0~2,as ones place)
		Thous-ands Place	External Fault(Err15) (0~2,as ones place)
		Ten	Communication Fault(Err16) (0~2,as ones place)

		thous-ands Place	
FA.14	Reserved		Default
	Setting range	Ones Place	Reserved
		0	Reserved
		1	Reserved
		2	Reserved
		Tens Place	Reserved
		0	Reserved
		1	Reserved
		Hundr-eds Place	Reserved
		Thous-ands Place	Reserved
		Ten thous-ands Place	Reserved
FA.15	Fault protection action selection 3		Default 00000
	Setting range	Ones Place	User-defined fault 1(Err27) (0~2,as ones place of FA.13)
		Tens Place	User-defined fault 2(Err28) (0~2,as ones place of FA.13)
		Hundr-eds Place	Powering on time reached(Err29) (0~2,as ones place of FA.13)
		Thous-ands Place	Load loss(Err30)
		0	Free stopping
		1	Stop according to the stop mode
		2	Decelerate to 7% of the rated frequency of the motor and continue to run, and automatically return to the set frequency if the load is not lost
		Ten	PID feedback loss during

		thous-ands Place	Running (Err31) (0~2,as ones place of FA.13)
FA.16	Reserved		Default
	Setting range	Ones Place	Reserved
		Tens Place	Reserved
		Hundr-eds Place	Reserved
		Thous-ands Place	Reserved
		Ten thous-ands Place	Reserved

When “free stop” is selected: the inverter prompts Err** and stops directly.

When "Stop according to stop mode" is selected: the inverter prompts A** and stops according to the stop mode, and prompts ErrXX after stopping.

When “continue running” is selected: the inverter continues to run and prompts A**. For the running frequency, refer to the description of FA.20 and FA.21.

FA.18	Undervoltage setting	Default	100.0%
	Setting range	60.0%~140.0%	

Adjusting this parameter can adjust the voltage point at which the inverter reports undervoltage fault (Err09), and 100.0% corresponds to 350V.

FA.19	Overvoltage setting	Default	810.0V
	Setting range	200.0V ~ 2500.0V	

Generally, this parameter is not adjusted after the inverter leaves the factory. If there is frequent overvoltage during operation, please consult the manufacturer's customer service department before making adjustments.

FA.20	Continue running frequency selection during failure	Default	0

	Setting range	0	Run with the current run frequency	
		1	Run with the setting frequency	
		2	Run with the upper limit frequency	
		3	Run with lower limit frequency.	
		4	Run with standby frequency when abnormal (FA.21)	
FA.21	Abnormal standby frequency setting		Default	100.0%（Current set frequency）
	Setting range		60.0%~100.0%	

When a fault occurs during the operation of the inverter and the fault handling method is keep running, the inverter prompts A** and runs at the set frequency determined by this function.

FA.22	Action selection at instantaneous power failure		Default	0
	Setting range	0	Invalid	
		1	Stop as Deceleration time 1	
		2	Stop as Deceleration time 2	
FA.23	Action pause judging voltage at instantaneous power failure		Default	90.0%
	Setting range		80.0%~100.0%(Standard Bus Voltage)	
FA.24	Voltage rally judging time at instantaneous power failure		Default	0.50s
	Setting range		0.00s~100.00s	
FA.25	Action judging voltage at instantaneous power failure		Default	80.0%
	Setting range		60.0%~100.0%(Standard Bus Voltage)	

This function means that the inverter will not stop when the power is cut instantaneously. In the case of an instantaneous power failure or a sudden voltage drop, the inverter will reduce its output speed, and compensate for the voltage drop by feeding back energy through the load to keep the inverter running in a short time.

If the instantaneous stop non-stop function selection is valid, when the bus voltage is lower than the

voltage indicated by the instantaneous stop non-stop action judgment voltage (FA.25), the inverter will decelerate according to the instantaneous stop action selection. When the stop action judgment voltage (FA.25) represents the voltage, and the duration is maintained for the momentary stop and non-stop voltage rise judgment time (FA.24), the inverter resumes the set frequency operation; otherwise the inverter will continue to reduce the operating frequency to Stop at 0 o'clock. Instantaneous stop non-stop function if shown.

The deceleration time of instantaneous power failure is too long, the load feedback energy is small, and the low voltage can not be effectively compensated; the deceleration time is too short, the load feedback energy is large, which will cause overvoltage protection. Please adjust the deceleration time appropriately according to the load inertia and the weight of the load.

FA.26	Loss of loads protection options		Default	0
	Setting range	0	Disabled	
		1	Enabled	
FA.27	Loss of loads detection level		Default	10.0%
	Setting range		0.0%~100.0%（Motor rated current）	
FA.28	Loss of loads detection time		Default	1.0s
	Setting range		0.0s~60.0s	

If this function is valid, when the inverter loses load, the inverter reports Err30 fault, and the output frequency is 7% of the rated frequency; if the load is restored, it will run at the set frequency. The off-load detection level and detection time can be set.

FA.29	The decimal point of the frequency in failure state		Default	222
	Setting range	Ones Place	The third fault frequency decimal point	
		1	1 decimal point	
		2	2 decimal point	
		Tens Place	The second fault frequency decimal point (1~2,as ones place)	
		Hundreds Place	The first fault frequency decimal point (1~2,as ones place)	

Since the frequency decimal point can be set, this function code is used to record the position of the decimal point of the frequency at the time of failure (for frequency display during failure).

Note: The function code display data is H.xxx, where H. means hexadecimal data.

FB GROUP FREQUENCY SWING, LENGTH FIXING AND COUNTING

The swing frequency function is suitable for textile, chemical fiber and other industries and occasions that require traverse and winding functions.

Swing frequency function means that the output frequency of the inverter swings up and down around the set frequency (frequency command is selected by F0.07). The trajectory of the running frequency on the time axis is shown in the figure below, where the swing amplitude is determined by FB.00 and FB. 01 setting, when FB.01 is set to 0, that is, the swing amplitude is 0, and the swing frequency has no effect.

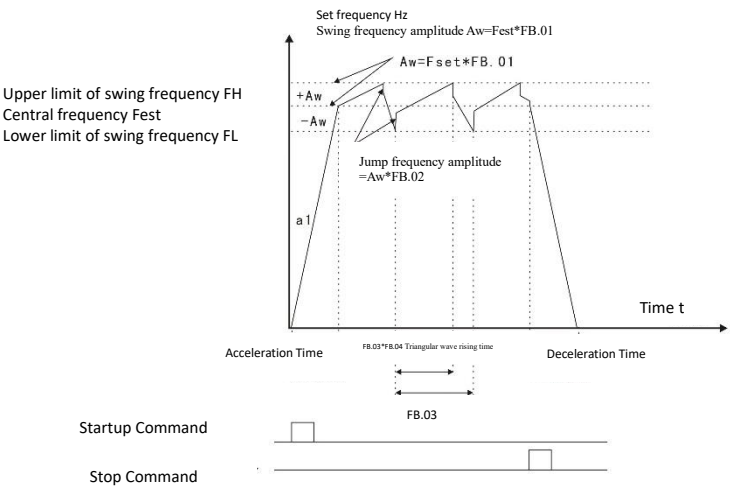

Figure 6-23 Schematic diagram of swing frequency work

FB.00	Swing frequency setting mode		Default	0
	Setting range	0	Relative to the central frequency	
		1	Relative to the maximum frequency	

Use this parameter to determine the reference amount of swing.

0: Relative to the center frequency (F0.07 frequency source selection), a variable swing amplitude system. The swing amplitude changes with the center frequency (set frequency).

1: Relative to the maximum frequency (F0.10 maximum output frequency), it is a fixed swing amplitude system.

FB.01	Swing frequency amplitude		Default	0.0%
	Setting range	0.0%~100.0%		
FB.02	Jump frequency amplitude		Default	0.0%
	Setting range	0.0%~50.0%		

Use this parameter to determine the swing amplitude and kick frequency. The swing frequency operation frequency is restricted by the upper and lower limit frequencies.

The swing amplitude is relative to the center frequency (variable swing amplitude, select FB.00=0): swing amplitude AW = frequency source F0.07 × swing amplitude FB.01.

The swing amplitude is relative to the maximum frequency (fixed swing amplitude, select FB.00=1): swing amplitude AW = maximum frequency F0.10× swing amplitude FB.01.

Kick frequency = swing amplitude AW × sudden jump frequency amplitude FB.02. That is, when the swing frequency is running, the value of the kick frequency relative to the swing amplitude.

If the swing amplitude is relative to the center frequency (variable swing amplitude, select FB.00=0), the kick frequency is the variable value.

If the swing amplitude is relative to the maximum frequency (fixed swing amplitude, select FB.00=1), the kick frequency is a fixed value.

FB.03	Swing frequency cycle		Default	10.0s
	Setting range	0.0s~3000.0s		
FB.04	Triangular wave rising time coefficient		Default	50.0%
	Setting range	0.0%~100.0%		

Swing frequency cycle: the time value of a complete swing frequency cycle. FB.04 triangle wave rise time coefficient is relative to FB.03 swing frequency period.

Triangular wave rise time = swing frequency period FB.03 × triangular wave rise time coefficient FB.04 (unit: s)

Triangular wave falling time = swing frequency period FB.03 × (1-triangular wave rising time coefficient FB.04) (unit: s)

FB.05	Setting length	Default	1000m
	Setting range	0m~65535m	
FB.06	Actual length	Default	0m
	Setting range	0m~65535m	
FB.07	Number of pulses per meter	Default	100.0
	Setting range	0.1~6553.5	

The three function codes of set length, actual length and number of pulses per m are mainly used for fixed length control. The length is calculated by the pulse signal input from the digital input terminal, and the corresponding input terminal needs to be set as the length counting input terminal. Generally, when the pulse frequency is high, DI5 input is required.

Actual length = length count input pulse number / pulse number per m

When the actual length FB.06 exceeds the set length FB.05, the multi-function digital output terminal "length reach terminal" will output ON signal (please refer to F1.04 function code)

FB.08	Set count value	Default	1000
	Setting range 1~65535		
FB.09	Designated count value	Default	1000
	Setting range 1~65535		

The count value is counted by inputting the pulse signal from the counter input terminal in the multi-function switch input terminal.

When the count value reaches the set count value, the switch output terminal outputs a signal that the set count value has reached. The counter stops counting.

When the count value reaches the designated count value, the switch output terminal outputs a signal that the designated count value has reached. The counter continues to count and stops at the "set count value".

The designated count value FB.09 should not be greater than the set count value FB.08.

This function is as below:

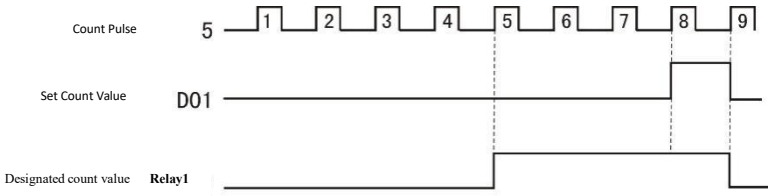

Figure 6-24 Schematic diagram of set count value given and designated count value given

FC GROUP COMMUNICATION PARAMETERS

FC.00	Local address	Default	1
	Setting range	00~247	

When the local address is set to 0, it is the broadcast address, which realizes the broadcast function of the host computer. The address of this machine is unique (except the broadcast address), which is the basis for the point-to-point communication between the host computer and the inverter.

FC.01	Baud Rate	Default	5
	Setting range	0	300 bps
		1	600 bps
		2	1200 bps
		3	2400 bps
		4	4800 bps
		5	9600 bps
		6	19200 bps
		7	38400 bps

This parameter is used to set the data transmission rate between the host computer and the inverter.

Note that the baud rate set by the host computer and the inverter must be consistent, otherwise, the communication cannot be carried out. The greater the baud rate, the faster the communication speed.

FC.02	Data format	Default	3
	Setting range	0	No check, data format <8,N,2>
		1	Even parity check, data format <8,E,1>
		2	Odd Parity check, data format <8,0,1>
		3	No check, data format <8,N,1>

The data format set by the host computer and the inverter must be same, otherwise, the communication cannot be carried out.

FC.03	Response delay	Default	2ms
	Setting range	0~20ms	

Response delay: refers to the intermediate time between the end of the inverter data receiving and the sending of data to the upper computer. If the response delay is less than the system processing time, the response delay is based on the system processing time. If the response delay is longer than the system processing time, the system will wait after processing the data until the response delay time expires before going to the upper computer. send data.

FC.04	Communication timeout	Default	0.0 s
	Setting range	0.0 s（Invalid）,0.1~60.0s	

When the function code is set to 0.0 s, the communication timeout time parameter is invalid.

When the function code is set to a valid value, if the interval between one communication and the next communication exceeds the communication timeout time, the system will report a communication failure error (Err16). Under normal circumstances, it is set to invalid. If you set the secondary parameters in a continuous communication system, you can monitor the communication status.

FC.05	Communication reading current resolution	Default	0
	Setting range	0	0.01A

		1	0.1A

Used to determine the output unit of the current value when the communication reads the output current.

FD GROUP MUTI-STAGE SPEED AND SIMPLE PLC FUNCTIONS

The simple PLC function is that the inverter has a programmable controller (PLC) built in to complete automatic control of multi-segment frequency logic. The running time, running direction and running frequency can be set to meet the technological requirements. This series of inverters can realize 16-speed change control, and there are 4 kinds of acceleration and deceleration time for selection. When the set PLC completes a cycle, an ON signal can be output from the multifunctional digital output terminals DO1 and DO2 or multifunctional relay 1 and relay 2. See F1.02~F1.05 for details. When the frequency source selection F0.07, F0.03, F0.04 is determined as the multi-speed operation mode, it is necessary to set FD.00~FD.15 to determine its characteristics.

FD.00	Multistage Speed0	Default	0.0%
	Setting range	-100.0%~100.0%； 100.0% for maximum frequency （F0.10）	
FD.01	Multistage Speed1	Default	0.0%
	Setting range	-100.0%~100.0%	
FD.02	Multistage Speed2	Default	0.0%
	Setting range	-100.0%~100.0%	
FD.03	Multistage Speed3	Default	0.0%
	Setting range	-100.0%~100.0%	
FD.04	Multistage Speed4	Default	0.0%
	Setting range	-100.0%~100.0%	
FD.05	Multistage Speed5	Default	0.0%
	Setting range	-100.0%~100.0%	
FD.06	Multistage Speed6	Default	0.0%
	Setting range	-100.0%~100.0%	
FD.07	Multistage Speed7	Default	0.0%
	Setting range	-100.0%~100.0%	

FD.08	Multistage Speed8	Default	0.0%
	Setting range	-100.0%~100.0%	
FD.09	Multistage Speed9	Default	0.0%
	Setting range	-100.0%~100.0%	
FD.10	Multistage Speed10	Default	0.0Hz
	Setting range	-100.0%~100.0%	
FD.11	Multistage Speed11	Default	0.0%
	Setting range	-100.0%~100.0%	
FD.12	Multistage Speed12	Default	0.0%
	Setting range	-100.0%~100.0%	
FD.13	Multistage Speed13	Default	0.0%
	Setting range	-100.0%~100.0%	
FD.14	Multistage Speed14	Default	0.0%
	Setting range	-100.0%~100.0%	
FD.15	Multistage Speed15	Default	0.0%
	Setting range	-100.0%~100.0%	

When the frequency source parameters F0.07, F0.03, F0.04 are determined to be the PLC operation mode, you need to set FD.00 ~ FD.15, FD.16, FD.17, FD.18 ~ FD.49 to determine them. characteristic. Note: The symbols of FD.00~FD.15 determine the running direction of the simple PLC. If it is negative, it means running in the reverse direction.

Simple PLC schematic diagram:

FD.16	Simple PLC running mode		Default	0
	Setting range	0	Stop after the AC Drive runs one cycle	
		1	Keep final values after the AC Drive runs one cycle（running frequency）	
		2	Repeat after the AC Drive runs one cycle	
FD.17	Simple PLC retentive selection		Default	00
	Setting range	Ones place	(Retentive upon power failure)	
		0	No	

		1	Yes
		Tens place	(Retentive upon stop)
		0	No
		1	Yes

PLC operation mode

0: Stop after the AC Drive runs one cycle

After the inverter completes a single cycle, it stops automatically, and it needs to be given a run command again to start.

1: Keep final values after the AC Drive runs one cycle（running frequency）

After the inverter completes a single cycle, it automatically maintains the operating frequency and direction of the last segment.

2: Repeat after the AC Drive runs one cycle

After the inverter completes one cycle, it will automatically start the next cycle until the system stops when there is a stop command.

3: Retentive upon power failure

PLC power-down memory refers to memorizing the operation stage and frequency of PLC before power-off.

4: Retentive upon stop

PLC stop memory is to record the previous PLC running stage and running frequency when stopping.

FD.18	Running time of simple PLC reference 0	Default	0.0s(h)
	Setting range	0.0s(h)~6553.5s(h)	
FD.19	Acceleration/deceleration time of simple PLC reference 0	Default	0
	Setting range	0~3	
FD.20	Running time of simple PLC reference 1	Default	0.0s(h)
	Setting range	0.0s(h)~6553.5s(h)	
FD.21	Acceleration/deceleration time of simple PLC reference 1	Default	0
	Setting range	0~3	
FD.22	Running time of simple PLC reference 2	Default	0.0s(h)

	Setting range	0.0s(h)~6553.5s(h)	
FD.23	Acceleration/deceleration time of simple PLC reference 2	Default	0
	Setting range	0~3	
FD.24	Running time of simple PLC reference 3	Default	0.0s(h)
	Setting range	0.0s(h)~6553.5s(h)	
FD.25	Acceleration/deceleration time of simple PLC reference 3	Default	0
	Setting range	0~3	
FD.26	Running time of simple PLC reference 4	Default	0.0s(h)
	Setting range	0.0s(h)~6553.5s(h)	
FD.27	Acceleration/deceleration time of simple PLC reference 4	Default	0
	Setting range	0~3	
FD.28	Running time of simple PLC reference 5	Default	0.0s(h)
	Setting range	0.0s(h)~6553.5s(h)	
FD.29	Acceleration/deceleration time of simple PLC reference 5	Default	0
	Setting range	0~3	
FD.30	Running time of simple PLC reference 6	Default	0.0s(h)
	Setting range	0.0s(h)~6553.5s(h)	
FD.31	Acceleration/deceleration time of simple PLC reference 6	Default	0
	Setting range	0~3	
FD.32	Running time of simple PLC reference 7	Default	0.0s(h)
	Setting range	0.0s(h)~6553.5s(h)	
FD.33	Acceleration/deceleration time of simple PLC reference 7	Default	0

	Setting range	0~3	
FD.34	Running time of simple PLC reference 8	Default	0.0s(h)
	Setting range	0.0s(h)~6553.5s(h)	
FD.35	Acceleration/deceleration time of simple PLC reference 8	Default	0
	Setting range	0~3	
FD.36	Running time of simple PLC reference 9	Default	0.0s(h)
	Setting range	0.0s(h)~6553.5s(h)	
FD.37	Acceleration/deceleration time of simple PLC reference 9	Default	0
	Setting range	0~3	
FD.38	Running time of simple PLC reference 10	Default	0.0s(h)
	Setting range	0.0 s(h)~6553.5s(h)	
FD.39	Acceleration/deceleration time of simple PLC reference 10	Default	0
	Setting range	0~3	
FD.40	Running time of simple PLC reference 11	Default	0.0s(h)
	Setting range	0.0s(h)~6553.5s(h)	
FD.41	Acceleration/deceleration time of simple PLC reference 11	Default	0
	Setting range	0~3	
FD.42	Running time of simple PLC reference 12	Default	0.0s(h)
	Setting range	0.0s(h)~6553.5s(h)	
FD.43	Acceleration/deceleration time of simple PLC reference 12	Default	0
	Setting range	0~3	
FD.44	Running time of simple PLC reference 13	Default	0.0s(h)

	Setting range		0.0s(h)~6553.5s(h)	
FD.45	Acceleration/deceleration time of simple PLC reference 13		Default	0
	Setting range		0~3	
FD.46	Running time of simple PLC reference 14		Default	0.0s(h)
	Setting range		0.0s(h)~6553.5s(h)	
FD.47	Acceleration/deceleration time of simple PLC reference 14		Default	0
	Setting range		0~3	
FD.48	Running time of simple PLC reference 15		Default	0.0s(h)
	Setting range		0.0s(h)~6553.5s(h)	
FD.49	Acceleration/deceleration time of simple PLC reference 15		Default	0
	Setting range		0~3	
FD.50	Time unit of simple PLC running		Default	0
	Setting range	0	s:second	
		1	h:hour	
		2	min:minute	
FD.51	The source of multistage speed 0		Default	0
	Setting range	0	Set by FD.00	
		1	AI1	
		2	AI2	
		3	Reserved	
		4	PULSE set（Reserved）	
		5	PID	
		6	Set by preset frequency (F0.08)	

This parameter determines the target quantity given channel of multi-speed 0.

FE GROUP USER PASSWORD MANAGEMENT

FE.00	User password	Default	0
	Setting range	0~65535	

Set to any non-zero number, the password protection function will take effect.

00000: Clear the previously set user password value and disable the password protection function.

When the user password is set and effective, when entering the parameter setting state again, if the user password is incorrect, you can only view the parameters, but

cannot modify the parameters. Please keep in mind the user password. If you accidentally set it by mistake or forget it, please contact the manufacturer.

FE.01	Fault record display times	Default	5
	Setting range	0~15	

This function code is used to set the number of displaying fault records.

APPENDIX

1 Braking resistor selection

✎Note: Woodworking engraving machine, lifting, centrifugal drying and other industries belong to the high-frequency braking occasions recommended to use higher power braking resistors.

AC Drive Model	Inverter Power	Braking resistor power (General occasions/High frequency braking occasions)	Braking resistor resistance value
	kW	kW	Ω
Single phase 220V input			
VB-2SR75GB	0.8	0.1/0.15	200.0
VB-2S1R5GB	1.5	0.2/0.3	100.0

VB-2S2R2GB	2.2	0.2/0.5	70.0
Three-phase 380V input			
VB-4TR75GB	0.8	0.1/0.15	750.0
VB-4T1R5GB	1.5	0.2/0.3	400.0
VB-4T2R2GB	2.2	0.2/0.5	250.0
VB-4T004GB/5R5PB	4/5.5	0.4/0.8	150.0
VB-4T5R5GB/7R5PB	5.5/7.5	0.6/1.2	100.0
VB-4T7R5GB	7.5	0.8/1.5	75.0
VB-4T011GB/015PB	11/15	1.1/2.5	50.0
VB-4T015GB/18R5PB	15/18.5	1.5/3.0	40.0
VB-4T18R5GB/022PB	18.5/22	1.9/4.0	30.0
VB-4T022GB/030PB	22/30	2.2/4.5	25.0
VB-4T030G/037P	30/37	3.0/6.0	20.0
VB-4T037G/045P	37/45	3.7/7.5	15.0
VB-4T045G/055P	45/55	4.5/9.0	13.0
VB-4T055G/075P	55/75	5.5/15	11.0
VB-4T075G/093P	75/93	7.5/18	8.0
VB-4T093G/110P	93/110	9.3/20	6.0
VB-4T110G/132P	110/132	11.0/25	6.0
VB-4T132G/160P	132/160	13.2/33.0	5.0
VB-4T160G/185P	160/185	16.0/40.0	4.0

VB-4T185G/200P	185/200	18.5/46.0	3.0
VB-4T200G/220P	200/220	20.0/50.0	3.0
VB-4T220G/250P	220/250	22.0/55.0	3.0
VB-4T250G/280P	250/280	25.0/62.5	2.0
VB-4T280G/315P	280/315	28.0/70.0	2.0
VB-4T315G/355P	315/355	31.5/79.0	2.0
VB-4T355G/400P	355/400	35.5/89.0	1.5
VB-4T400G	400.0	40.0/100.0	1.5

2 Recommended power terminal wire

AC Drive Model	Power	Rated input current	Rated output current	Recommended input cable	Recommended output cable	Main terminal adapter lug
	kW	A	A	mm²	mm²	Model
Single phase 220V input						
VB-2SR75GB	0.75	8.2	4.5	0.75	0.75	E1510
VB-2S1R5GB	1.5	14	7	1.5	1.5	E1510
VB-2S2R2GB	2.2	23	9.6	2.5	2.5	E1510
Three-phase 380V input						
VB-4TR75GB	0.75	3.4	2.1	0.75	0.75	E1510
VB-4T1R5GB	1.5	5	3.8	0.75	0.75	E1510
VB-4T2R2GB	2.2	5.8	5.1	0.75	0.75	E1510
VB-4T004GB/5R5PB	4/5.5	10.5/14.6	44452	1.5	1.5	E1510

VB-4T5R5GB/7R5PB	5.5/7.5	14.6/20.5	13/17	2.5	2.5	E2512
VB-4T7R5GB	7.5	20.5	17	4	4	E2512
VB-4T011GB/015PB	44515	26/35	25/32	4	4	GTNR 6-5
VB-4T015GB/18R5PB	15/18.5	35/38.5	32/37	6	6	GTNR 6-5
VB-4T18R5GB/022PB	18.5/22	38.5/46	37/45	10	10	GTNR 10-6
VB-4T022GB/030PB	22/30	46.5/62	45/60	10	10	GTNR 10-6
VB-4T030G/037P	30/37	62/76	60/75	16	16	GTNR 25-6
VB-4T037G/045P	37/45	76/92	75/91	25	25	GTNR 25-6
VB-4T045G/055P	45/55	92/113	91/110	35	35	GTNR 35-10
VB-4T055G/075P	55/75	113/157	112/150	50	50	GTNR 50-10
VB-4T075G/093P	75/93	157/180	150/170	70	70	GTNR 95-10
VB-4T093G/110P	93/110	180/214	170/210	95	95	GTNR 95-10
VB-4T110G/132P	110/132	214/256	210/253	95	95	GTNR 95-10
VB-4T132G/160P	132/160	256/307	253/304	120	120	GTNR 150-12
VB-4T160G/185P	160/185	307/345	304/340	150	150	GTNR 150-12
VB-4T185G/200P	185/200	345/385	340/377	150	150	GTNR 150-12

VB-4T200G/220P	200/220	385/430	377/426	185	185	GTNR 185-16
VB-4T220G/250P	220/250	430/468	426/465	2x120	2x120	GTNR 150-16
VB-4T250G/280P	250/280	468/525	465/520	2x120	2x120	GTNR 150-16
VB-4T280G/315P	280/315	525/590	520/585	2x120	2x120	GTNR 150-16
VB-4T315G/355P	315/355	590/665	585/650	2x150	2x150	GTNR 150-16
VB-4T355G/400P	355/400	665/785	650/725	2x185	2x185	GTNR 185-16
VB-4T400G	400	785	725	2x240	2x240	GTNR 240-16

3 Ground wire selectio

1. The terminal must be grounded reliably, and the resistance of the grounding wire must be less than 0.1Ω. Otherwise, the equipment will work abnormally or even be damaged.

2. Do not share the grounding terminal and the N terminal of the neutral line of the power supply.

3. impedance of the protective grounding conductor must meet the requirements of being able to withstand the large short-circuit current that may occur in the event of a fault.

4. The protective grounding conductor must use a yellow-green cable.

5. The size of the protective grounding conductor is selected according to the following table:

The cross-sectional area of a phase wire (S)	Minimum cross-sectional area of protective conductor (Sp)
S ≤ 16mm2	S
16mm2＜ S ≤ 35mm2	16mm2
316mm2 ＜ S	S/2

2023-4-12

WECON Technology Co., Ltd
Addr: 10th Building, Area E, Software Park, Gulou District, Fuzhou, Fujian Province P.R.China
Tel: +86-591-87868869 Fax: +86-591-87843899
website: www.we-con.com.cn/en